TYPOLOGY

1. Designation

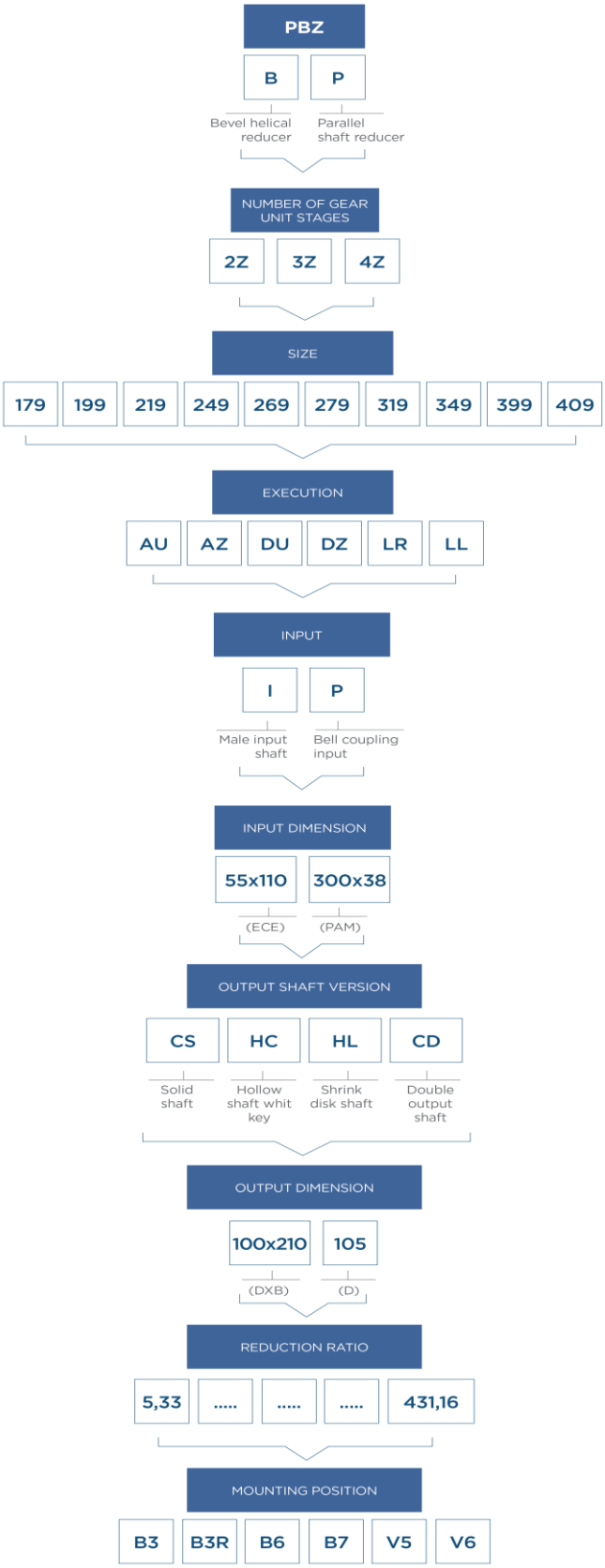

TYPOLOGY

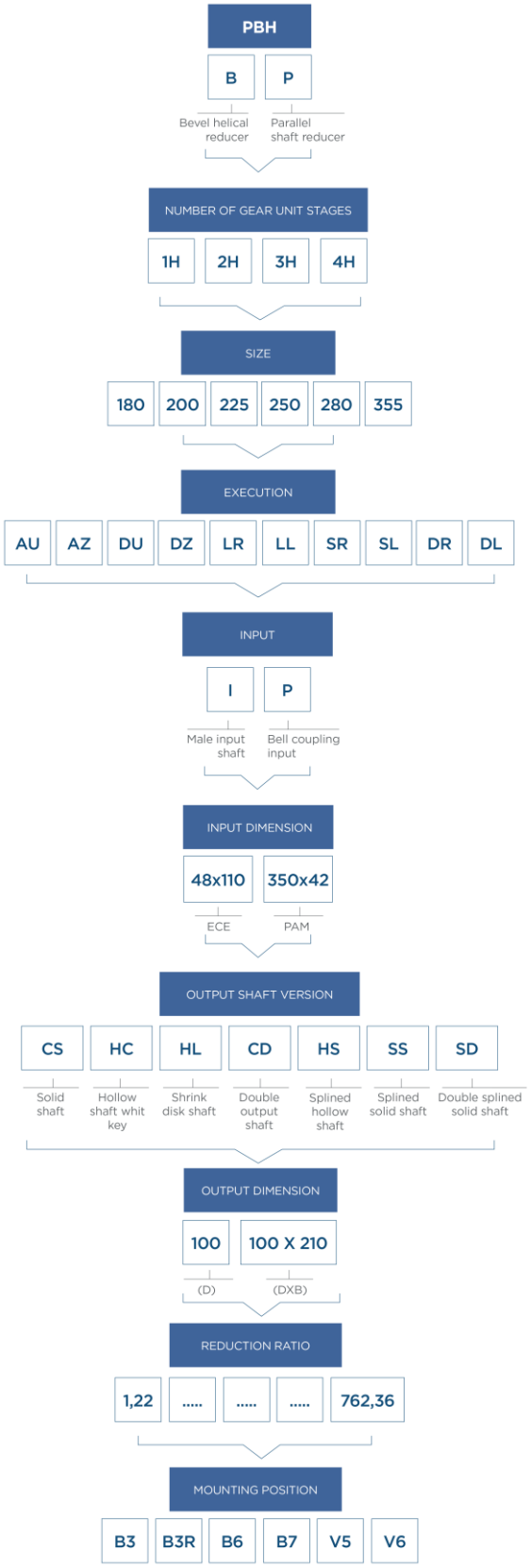
PBH
B
P
Bevel helical reducer
Parallel shaft reducer
NUMBER OF GEAR UNIT STAGES
1H
2H
3H
4H
SIZE
180
200
225
250
280
355
EXECUTION
AU
AZ
DU
DZ
LR
LL
SR
SL
DR
DL
INPUT
I
P
Male input shaft
Bell coupling input
INPUT DIMENSION
48x110
350x42
ECE
PAM
OUTPUT SHAFT VERSION
CS
HC
HL
CD
HS
SS
SD
Solid shaft
Hollow shaft whit key
Shrink disk shaft
Double output shaft
Splined hollow shaft
Splined solid shaft
Double splined solid shaft
OUTPUT DIMENSION
100
100 X 210
(D)
(DXB)
REDUCTION RATIO
1,22
.....
.....
.....
762,36
MOUNTING POSITION
B3
B3R
B6
B7
V5
V6

TYPOLOGY

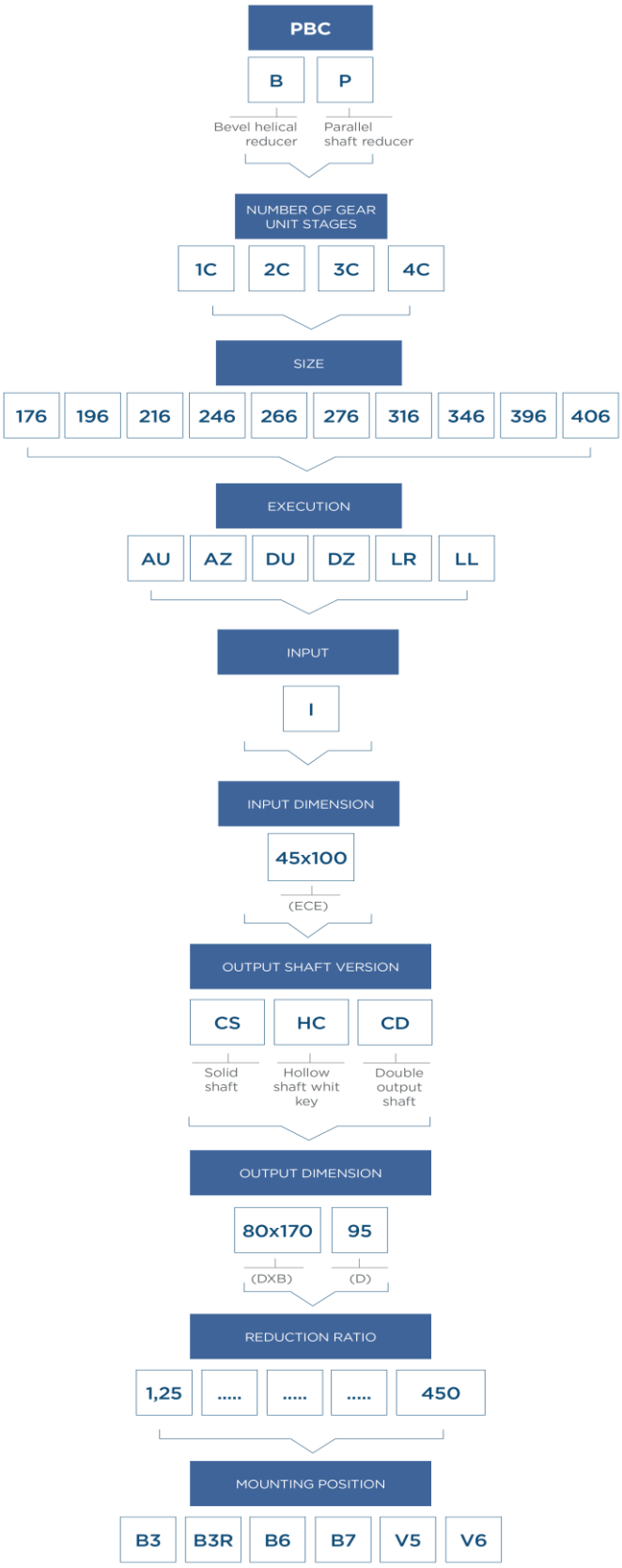
PBC
B
P
Bevel helical reducer
Parallel shaft reducer
NUMBER OF GEAR UNIT STAGES
1C
2C
3C
4C
SIZE
176
196
216
246
266
276
316
346
396
406
EXECUTION
AU
AZ
DU
DZ
LR
LL
INPUT
I
INPUT DIMENSION
45x100
(ECE)
OUTPUT SHAFT VERSION
CS
HC
CD
Solid shaft
Hollow shaft whit key
Double output shaft
OUTPUT DIMENSION
80x170
95
(DXB)
(D)
REDUCTION RATIO
1,25
.....
.....
.....
450
MOUNTING POSITION
B3
B3R
B6
B7
V5
V6

2. Versions

	Parallel Helical gear reducers	Bevel Helical gear reducers
Solid-shaft input PBZ-PBH-PBC	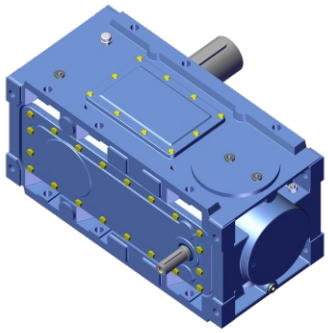	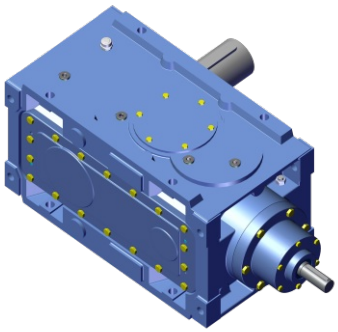
Bell-housing input with coupling PBZ-PBH	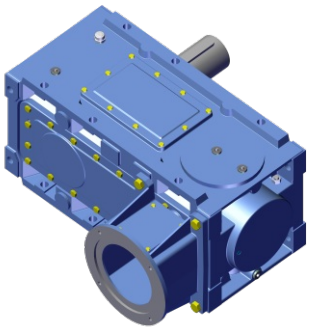	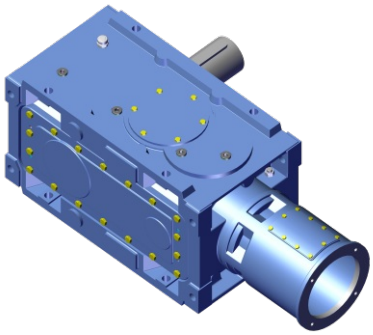

3. Gear train

Parallel helical gear reducers

P1H-P1C	P2Z-P2H-P2C
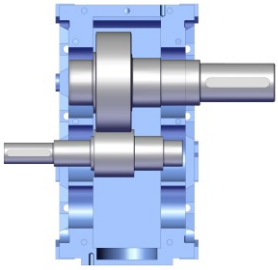	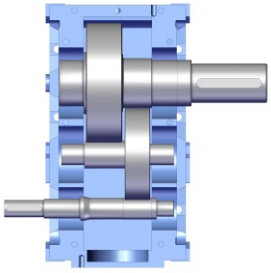
P3Z-P3H-P3C	**P4Z-P4H-P4C**
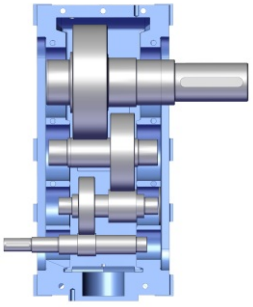	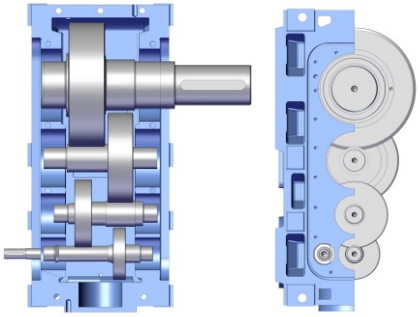

Bevel helical gear reducers

B2H-B2C	B3Z-B3H-B3C
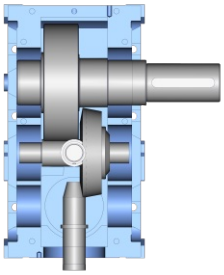	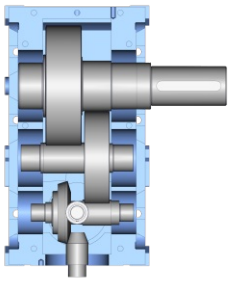
B4Z	**B4H-B4C**
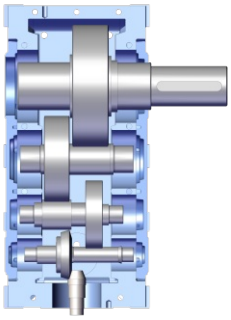	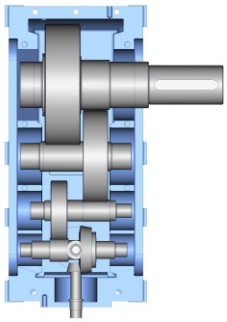

4. Available motor mounting flanges

The tables show available coupling configurations and the matching motors.
To determine the compatibility of a geared unit in terms of mechanical factors, double check the selected configuration against the rating charts performance.
To check the availability of the motor coupling dimensions based on sizes, gears and ratios, refer to the paragraph of the dimensional tables.
For brake motors with frame sizes greater than IEC 180, please contact MOTOVARIO TECHNICAL SERVICE.

PZ	MOT. IEC							
	132	160	180	200	225	250	280	315
179	-	-	P2Z	P2Z	P2Z	P2Z	-	-
	P3Z	P3Z	P3Z	P3Z	P3Z	P3Z		
199	-	-	P2Z	P2Z	P2Z	P2Z	-	
	P3Z	P3Z	P3Z	P3Z	P3Z	P3Z		
219	-	-	-	-	P2Z	P2Z	P2Z	P2Z
	-	P3Z	P3Z	P3Z	P3Z	P3Z	-	-
	P4Z	P4Z	P4Z	-	-	-	-	-
249	-	-	-	-	P2Z	P2Z	P2Z	P2Z
	-	P3Z	P3Z	P3Z	P3Z	P3Z	-	-
	P4Z	P4Z	P4Z	-	-	-	-	-
269	-	-	-	-	-	-	P2Z	P2Z
	-	-	P3Z	P3Z	P3Z	P3Z	P3Z	P3Z
	P4Z	P4Z	P4Z	P4Z	P4Z	-	-	-
279	-	-	-	-	-	-	P2Z	P2Z
	-	-	P3Z	P3Z	P3Z	P3Z	P3Z	P3Z
	P4Z	P4Z	P4Z	P4Z	P4Z	-	-	-
319	-	-	-	-	-	-	-	P2Z
		-	-	-	P3Z	P3Z	P3Z	P3Z
		P4Z	P4Z	P4Z	P4Z	P4Z	-	
349	-	-	-	-	-	-	-	P2Z
		-	-	-	P3Z	P3Z	P3Z	P3Z
		P4Z	P4Z	P4Z	P4Z	P4Z	-	-

BZ	MOT. IEC							
	132	160	180	200	225	250	280	315
179	B3Z	B3Z	B3Z	B3Z	B3Z	B3Z	-	-
199	B3Z	B3Z	B3Z	B3Z	B3Z	B3Z	-	-
219	-	B3Z	B3Z	B3Z	B3Z	B3Z	-	-
	B4Z	B4Z	B4Z	-	-	-		
249	-	B3Z	B3Z	B3Z	B3Z	B3Z	-	-
	B4Z	B4Z	B4Z	-	-	-		
269	-	-	B3Z	B3Z	B3Z	B3Z	B3Z	B3Z
	B4Z	B4Z	B4Z	B4Z	B4Z	-	-	-
279	-	-	B3Z	B3Z	B3Z	B3Z	B3Z	B3Z
	B4Z	B4Z	B4Z	B4Z	B4Z	-	-	-
319	-	-	-	-	B3Z	B3Z	B3Z	B3Z
		B4Z	B4Z	B4Z	B4Z	B4Z	-	-
349	-	-	-	-	B3Z	B3Z	B3Z	B3Z
		B4Z	B4Z	B4Z	B4Z	B4Z	-	-

TYPOLOGY

PH	MOT. IEC							
	100-112	132	160	180	200	225	250-280	315
180	P3H	P3H	P3H	P2H	P2H	P2H	P2H	-
	P4H	P4H		P3H	P3H			
200	P4H	P3H	P3H	P3H	P2H	P2H	P2H	-
		P4H	P4H	P4H	P3H	P3H		
225	-	P4H	P3H	P3H	P3H	P2H	P2H	-
			P4H	P4H		P3H	P3H	
250	-	P4H	P3H	P3H	P3H	P3H	P2H	P2H
			P4H	P4H	P4H		P3H	
280	-	P4H	P3H	P3H	P3H	P3H	P2H	P2H
			P4H	P4H	P4H	P4H	P3H	P3H
355	-	-	P4H	P4H	P4H	P3H	P3H	P2H
						P4H	P4H	P3H

BH	MOT. IEC							
	100-112	132	160	180	200	225	250-280	315
180	B3H	B3H	B2H	B2H	B2H	B2H	B2H	-
	B4H	B4H	B3H	B3H	B3H			
200	B4H	B3H	B3H	B3H	B2H	B2H	B2H	B2H
		B4H	B4H	B4H	B3H	B3H		
225	B4H	B4H	B3H	B3H	B2H	B2H	B2H	B2H
			B4H	B4H	B3H	B3H	B3H	
250	-	B4H	B3H	B3H	B3H	B2H	B2H	B2H
			B4H	B4H	B4H	B3H	B3H	
280	-	B4H	B3H	B3H	B3H	B3H	B2H	B2H
			B4H	B4H	B4H	B4H	B3H	B3H
355	-	-	B4H	B4H	B4H	B3H	B3H	B2H
						B4H	B4H	B3H

5. Range

The values shown have been calculated at 1400 rpm.

PZ	Mn_2 [Nm]	i	
	Max	Min	Max
179	9000	6	86
199	11000	8	107
219	19000	6	318
249	24000	8	403
269	29000	6	339
279	36000	8	419
319	55000	6	314
349	70000	8	404
399	90000	6	319
409	110000	8	386

BZ	Mn_2 [Nm]	i	
	Max	Min	Max
179	9000	13	69
199	11000	16	86
219	19000	12	323
249	24000	15	410
269	29000	12	348
279	36000	15	431
319	55000	12	320
349	70000	16	412
399	90000	12	327
409	110000	15	395

TYPOLOGY

PH	Mn_2 [Nm]	i	
	Max	Min	Max
180	13000	2,04	604,77
200	18300	1,95	600,10
225	28000	1,96	627,06
250	35200	2,04	635,69
280	49500	1,96	625,43
355	91300	1,95	626,60

BH	Mn_2 [Nm]	i	
	Max	Min	Max
180	13000	5,27	592,67
200	18200	5,44	632,08
225	27900	5,41	634,03
250	35200	5,44	632,71
280	46500	5,41	622,50
355	80000	5,52	604,00

TYPOLOGY

PC	Mn_2 [Nm]	i	
	Max	Min	Max
176	9280	1,25	90
196	12400	8	112
216	17360	1,25	355
246	21760	8	450
266	28560	1,25	355
276	35040	8	450
316	50800	1,6	355
346	61760	8	450
396	70400	1,6	355
406	87200	8	450

BC	Mn_2 [Nm]	i	
	Max	Min	Max
176	9280	5	315
196	12400	6,3	400
216	17360	5	315
246	22160	6,3	400
266	28560	5	315
276	35040	6,3	400
316	50800	5	315
346	61760	6,3	400
396	72560	5	315
406	90400	6,3	400