10.2 DIMENSIONS AND TECHNICAL SPECIFICATIONS

LC 050

25AH ... 80A

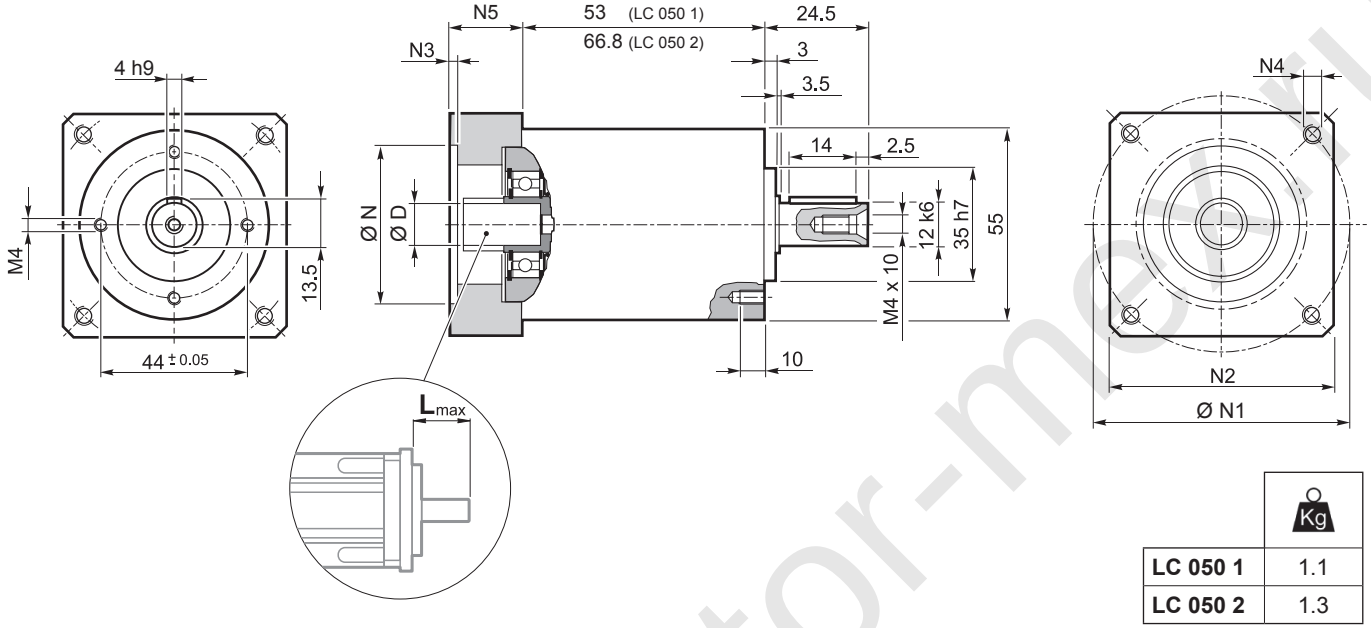

	Kg
LC 050 1	1.1
LC 050 2	1.3

	D											N	N1 min	N1 max	N2	N3	N4	N5	L_{max}
25AH	6	6.35	7	8	9	9.52	–	–	–	–	–	25	36	48	55	3.5	4.5	25	25
26AH	6	6.35	7	8	9	9.52	–	–	–	–	–	26	36	48					
28AH	6	6.35	7	8	9	9.52	–	–	–	–	–	28	36	48					
30AH	6	6.35	7	8	9	9.52	–	–	–	–	–	30	36	48					
32AH	6	6.35	7	8	9	9.52	–	–	–	–	–	32	38	48					
34AH	6	6.35	7	8	9	9.52	–	–	–	–	–	34	40	48					
36AH	6	6.35	7	8	9	9.52	–	–	–	–	–	36	42	48					
38AH	6	6.35	7	8	9	9.52	–	–	–	–	–	38	44	48					
40AH	6	6.35	7	8	9	9.52	–	–	–	–	–	40	46	48					
38B	6	6.35	7	8	9	9.52	10	11	12	12.7	–	38.1	66.6		60	3	M4x10	18	25
40B	6	6.35	7	8	9	9.52	10	11	12	12.7	–	40	63		60	3	M4x10	18	25
50A	6	6.35	7	8	9	9.52	10	11	12	12.7	–	50	60		60	3	M4x10	18	25
50B	6	6.35	7	8	9	9.52	10	11	12	12.7	14	50	65		60	3	M5x12	23	30
50BH	6	6.35	7	8	9	9.52	10	11	12	12.7	14	50	65		60	4	5.5	23	30
50C	6	6.35	7	8	9	9.52	10	11	12	12.7	14	50	70		60	3	M4x10	23	30
50MH	6	6.35	7	8	9	9.52	10	11	12	12.7	–	50	65		55	4	5.5	16	23
60A	6	6.35	7	8	9	9.52	10	11	12	12.7	–	60	75		65	3	M5x12	18	25
60AH	6	6.35	7	8	9	9.52	10	11	12	12.7	–	60	75		65	3	5.5	18	25
60A1	6	6.35	7	8	9	9.52	10	11	12	12.7	14	60	75		65	3	M5x12	23	30
60AH1	6	6.35	7	8	9	9.52	10	11	12	12.7	14	60	75		65	3	5.5	23	30
60B	6	6.35	7	8	9	9.52	10	11	12	12.7	14	60	85		75	3	M5x12	23	30
60C	6	6.35	7	8	9	9.52	10	11	12	12.7	14	60	90		75	3	M5x12	23	30
70A	6	6.35	7	8	9	9.52	10	11	12	12.7	14	70	85		75	3	M6x15	23	30
70B	6	6.35	7	8	9	9.52	10	11	12	12.7	14	70	90		75	5	M5x12	23	30
73A	6	6.35	7	8	9	9.52	10	11	12	12.7	14	73	98.4		85	3	M5x12	25	32
80A	6	6.35	7	8	9	9.52	10	11	12	12.7	14	80	100		85	3	M6x15	23	30

Please contact us for different motor adapters and input shaft bore.

www.reduktor-mex.ru

LC 050

FM

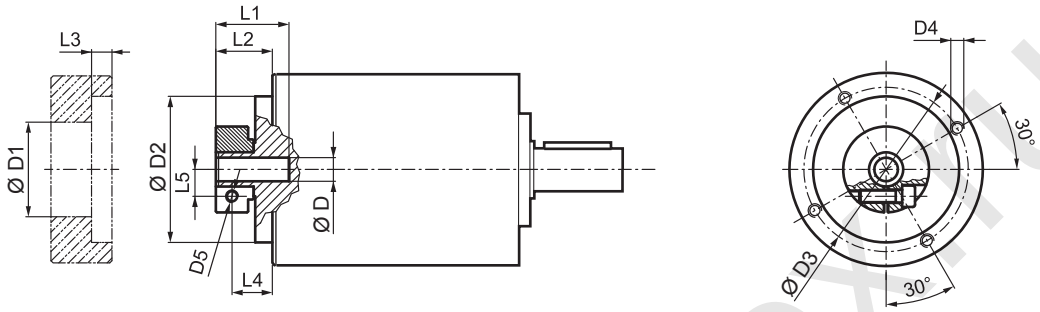

D				D1	D2	D3	D4	D5	L1	L2	L3	L4	L5
6	6.35	7		32.5	50	42.5	M4x8	M4	21.7	13.2	3	8.2	8
8	9	9.52	10	32.5	50	42.5	M4x8	M4	21.7	13.2	3	8.2	9
11	12	12.7		35.5	50	42.5	M4x8	M4	22	13.5	3	8.5	11
14				35.5	50	42.5	M4x8	M4	25	17	3	10.2	11.5

i	$M_{n\,2}$ [Nm]	$M_{a\,2}$ [Nm]	$M_{p\,2}$ [Nm]	n_1 [min^{-1}]	$n_{1\,max}$ [min^{-1}]	φ_S [arcmin]	φ_R [arcmin]	C_t [Nm/arcmin]	$R_{2\,max}$ [N]	$A_{2\,max}$ [N]	η %	J_G [kgcm^2] D 6 … 9.52	J_G [kgcm^2] D 10 … 14
LC 050 1_ 3	10	16	28	3300	4000	12’	6’	0.9	500	600	97	0.07	0.10
LC 050 1_ 4	12	20	30	3500	5000	12’	6’	0.9	500	600	97	0.06	0.08
LC 050 1_ 5	12	20	30	3500	5000	12’	6’	0.9	500	600	97	0.05	0.07
LC 050 1_ 7	12	20	30	4000	5000	12’	6’	0.9	500	600	97	0.04	0.06
LC 050 1_ 9	10	16	28	4000	6000	12’	6’	0.9	500	600	97	0.04	0.06
LC 050 2_ 12	12	20	30	3300	4000	15’	8’	0.75	500	600	94	0.07	0.09
LC 050 2_ 15	12	20	30	3300	4000	15’	8’	0.75	500	600	94	0.07	0.09
LC 050 2_ 16	12	20	30	3500	5000	15’	8’	0.75	500	600	94	0.05	0.07
LC 050 2_ 20	12	20	30	3500	5000	15’	8’	0.75	500	600	94	0.05	0.07
LC 050 2_ 25	12	20	30	3500	5000	15’	8’	0.75	500	600	94	0.05	0.07
LC 050 2_ 28	12	20	30	4000	5000	15’	8’	0.75	500	600	94	0.04	0.06
LC 050 2_ 35	12	20	30	4000	5000	15’	8’	0.75	500	600	94	0.04	0.06
LC 050 2_ 36	12	20	30	4000	6000	15’	8’	0.75	500	600	94	0.04	0.06
LC 050 2_ 45	12	20	30	4000	6000	15’	8’	0.75	500	600	94	0.04	0.06
LC 050 2_ 81	10	16	28	4000	6000	15’	8’	0.75	500	600	94	0.04	0.06

www.reduktor-mex.ru

LC 070

25AH ... 80A

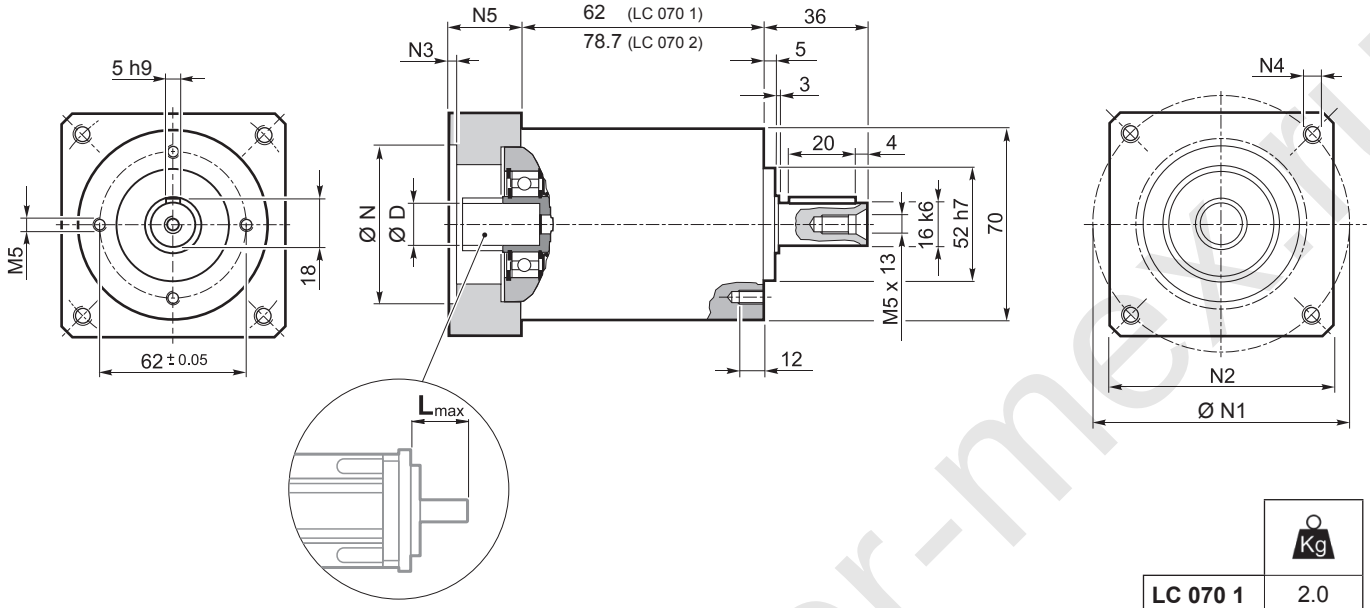

	Kg
LC 070 1	2.0
LC 070 2	2.3

	D										N	N1 min	N1 max	N2	N3	N4	N5	L_{max}
25AH	6.35	7	8	9	9.52	–	–	–	–	–	25	39	56					
26AH	6.35	7	8	9	9.52	–	–	–	–	–	26	39	56					
28AH	6.35	7	8	9	9.52	–	–	–	–	–	28	39	56					
30AH	6.35	7	8	9	9.52	–	–	–	–	–	30	39	56					
32AH	6.35	7	8	9	9.52	–	–	–	–	–	32	39	56	65	3.5	4.5	25	25
34AH	6.35	7	8	9	9.52	–	–	–	–	–	34	40	56					
36AH	6.35	7	8	9	9.52	–	–	–	–	–	36	42	56					
39AH	6.35	7	8	9	9.52	–	–	–	–	–	39	45	56					
40AH	6.35	7	8	9	9.52	–	–	–	–	–	40	46	56					
38B	6.35	7	8	9	9.52	10	11	12	12.7	–	38.1	66.6		60	3	M4x10	18	25
40B	6.35	7	8	9	9.52	10	11	12	12.7	–	40	63		60	3	M4x10	18	25
50A	6.35	7	8	9	9.52	10	11	12	12.7	–	50	60		60	3	M4x10	18	25
50B	6.35	7	8	9	9.52	10	11	12	12.7	14	50	65		60	3	M5x12	23	30
50BH	6.35	7	8	9	9.52	10	11	12	12.7	14	50	65		65	3	5.5	25	32
50C	6.35	7	8	9	9.52	10	11	12	12.7	14	50	70		60	3	M4x10	23	30
55MH	6.35	7	8	9	9.52	10	11	12	12.7	–	55	80		65	2	5.5	16	23
60A	6.35	7	8	9	9.52	10	11	12	12.7	–	60	75		65	3	M5x12	18	25
60A1	6.35	7	8	9	9.52	10	11	12	12.7	14	60	75		65	3	M5x12	23	30
60B	6.35	7	8	9	9.52	10	11	12	12.7	14	60	85		75	3	M5x12	23	30
60C	6.35	7	8	9	9.52	10	11	12	12.7	14	60	90		75	3	M5x12	23	30
70A	6.35	7	8	9	9.52	10	11	12	12.7	14	70	85		75	3	M6x15	23	30
70B	6.35	7	8	9	9.52	10	11	12	12.7	14	70	90		75	5	M5x12	23	30
73A	6.35	7	8	9	9.52	10	11	12	12.7	14	73	98.4		85	3	M5x12	25	32
80A	6.35	7	8	9	9.52	10	11	12	12.7	14	80	100		85	3	M6x15	23	30

Please contact us for different motor adapters and input shaft bore.

www.reduktor-mex.ru

LC 070

FM

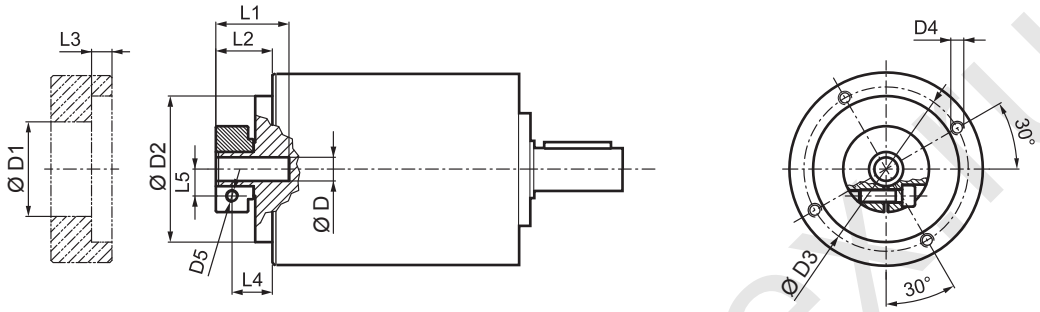

D				D1	D2	D3	D4	D5	L1	L2	L3	L4	L5
6.35	7			32.5	50	42.5	M4x8	M4	21.7	13.2	3	8.2	8
8	9	9.52	10	32.5	50	42.5	M4x8	M4	21.7	13.2	3	8.2	9
11	12	12.7		35.5	50	42.5	M4x8	M4	22	13.5	3	8.5	11
14				35.5	50	42.5	M4x8	M4	25	17	3	10.2	11.5

i	$M_{n\,2}$ [Nm]	$M_{a\,2}$ [Nm]	$M_{p\,2}$ [Nm]	n_1 [min^{-1}]	$n_{1\,max}$ [min^{-1}]	φ_S [arcmin]	φ_R [arcmin]	C_t [Nm/arcmin]	$R_{2\,max}$ [N]	$A_{2\,max}$ [N]	η %	J_G [kgcm²] D 6.35 ... 9.52	J_G [kgcm²] D 10 ... 14
LC 070 1_ 3	18	30	60	3300	4000	12’	6’	3	1300	1400	97	0.12	0.14
LC 070 1_ 4	25	35	70	3500	5000	12’	6’	3	1300	1400	97	0.08	0.10
LC 070 1_ 5	25	35	70	3500	5000	12’	6’	3	1300	1400	97	0.06	0.09
LC 070 1_ 7	25	35	70	4000	5000	12’	6’	3	1300	1400	97	0.05	0.07
LC 070 1_ 10	18	30	60	4000	6000	12’	6’	3	1300	1400	97	0.04	0.06
LC 070 2_ 9	18	30	60	3300	4000	15’	8’	2.5	1300	1400	94	0.11	0.13
LC 070 2_ 12	25	35	70	3300	4000	15’	8’	2.5	1300	1400	94	0.10	0.13
LC 070 2_ 15	25	35	70	3300	4000	15’	8’	2.5	1300	1400	94	0.10	0.12
LC 070 2_ 16	25	35	70	3500	5000	15’	8’	2.5	1300	1400	94	0.07	0.09
LC 070 2_ 20	25	35	70	3500	5000	15’	8’	2.5	1300	1400	94	0.06	0.08
LC 070 2_ 25	25	35	70	3500	5000	15’	8’	2.5	1300	1400	94	0.06	0.08
LC 070 2_ 28	25	35	70	4000	5000	15’	8’	2.5	1300	1400	94	0.05	0.07
LC 070 2_ 30	18	30	60	4000	6000	15’	8’	2.5	1300	1400	94	0.04	0.06
LC 070 2_ 35	25	35	70	4000	5000	15’	8’	2.5	1300	1400	94	0.05	0.07
LC 070 2_ 40	25	35	70	4000	6000	15’	8’	2.5	1300	1400	94	0.04	0.06
LC 070 2_ 50	25	35	70	4000	6000	15’	8’	2.5	1300	1400	94	0.04	0.06
LC 070 2_ 70	25	35	70	4000	6000	15’	8’	2.5	1300	1400	94	0.04	0.06
LC 070 2_ 100	18	30	60	4000	6000	15’	8’	2.5	1300	1400	94	0.04	0.06

www.redukto-mex.hu

LC 090

40B1 ... 110B1

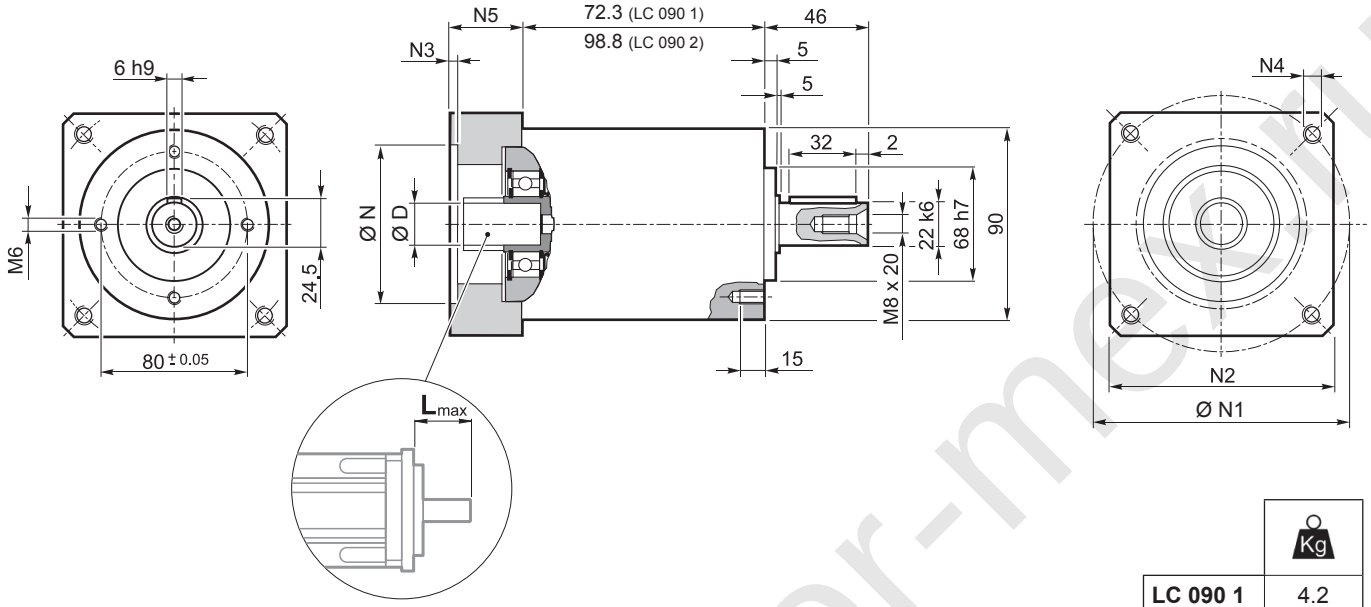

	Kg
LC 090 1	4.2
LC 090 2	5.3

	D											N	N1	N2	N3	N4	N5	L_{max}
40B1	9	9.52	11	12	12.7	14	–	–	–	–	–	40	63	80	4	M4x10	34	40
45A	9	9.52	11	12	12.7	–	–	–	–	–	–	45	63	80	4	M4x10	34	40
50B1	9	9.52	11	12	12.7	14	–	–	–	–	–	50	65	80	4	M5x16	34	40
50BH1	9	9.52	11	12	12.7	14	–	–	–	–	–	50	65	80	4	5.5	34	40
50C1	9	9.52	11	12	12.7	14	–	–	–	–	–	50	70	80	4	M4x10	34	40
50D	9	9.52	11	12	12.7	14	–	–	–	–	–	50	95	80	4	M6x10	34	40
55A	9	9.52	11	12	12.7	14	15.875	16	17	19	19.05	55.5	125.7	105	4	M6x16	34	40
60A2	9	9.52	11	12	12.7	14	–	–	–	–	–	60	75	80	4	M5x16	34	40
60AH2	9	9.52	11	12	12.7	14	–	–	–	–	–	60	75	90	4	5.5	34	40
60B1	9	9.52	11	12	12.7	14	15.875	16	–	–	–	60	85	80	4	M5x16	34	40
60C1	9	9.52	11	12	12.7	14	15.875	16	–	–	–	60	90	80	4	M5x16	34	40
70A1	9	9.52	11	12	12.7	14	15.875	16	17	19	19.05	70	85	80	4	M6x20	34	40
70AH1	9	9.52	11	12	12.7	14	15.875	16	17	19	19.05	70	85	90	4	6.5	34	40
70B1	9	9.52	11	12	12.7	14	15.875	16	17	19	19.05	70	90	80	4	M5x16	34	40
73A1	9	9.52	11	12	12.7	14	–	–	–	–	–	73	98.4	85	4	M5x16	34	40
80A1	9	9.52	11	12	12.7	14	15.875	16	17	19	19.05	80	100	90	4	M6x16	34	40
95A	9	9.52	11	12	12.7	14	15.875	16	17	19	19.05	95	115	100	4	M8x20	34	40
95B	9	9.52	11	12	12.7	14	15.875	16	17	19	19.05	95	130	115	4	M8x20	34	40
110A	9	9.52	11	12	12.7	14	15.875	16	17	19	19.05	110	130	115	4	M8x20	34	40
110B	9	9.52	11	12	12.7	14	15.875	16	17	19	19.05	110	145	120	6.5	M8x20	44	50
110B1	9	9.52	11	12	12.7	14	15.875	16	17	19	19.05	110	145	120	6.5	M8x20	54	60

Please contact us for different motor adapters and input shaft bore.

www.redukto-r-mexru

LC 090

FM

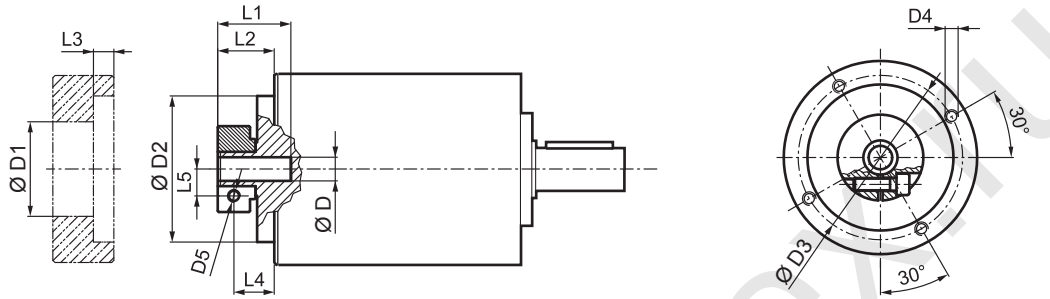

D	D1	D2	D3	D4	D5	L1	L2	L3	L4	L5
9 9.52	38	68	76.5	M6x10	M6	34	26.8	9.5	18.8	10.5
11 12 12.7	43	68	76.5	M6x10	M6	34	26.8	9.5	18.8	12.5
14 15.875 16 17	48	68	76.5	M6x10	M6	34	26.8	9.5	18.8	14.5
19 19.05	51	68	76.5	M6x10	M6	34	26.8	9.5	18.8	16.5

i	$M_{n\,2}$ [Nm]	$M_{a\,2}$ [Nm]	$M_{p\,2}$ [Nm]	n_1 [min^{-1}]	$n_{1\,max}$ [min^{-1}]	φ_S [arcmin]	φ_R [arcmin]	C_t [Nm/arcmin]	$R_{2\,max}$ [N]	$A_{2\,max}$ [N]	η %	J_G [kgcm^2] D 9 ... 12.7	J_G [kgcm^2] D 14 ... 19.05
LC 090 1_ 3	37	70	150	2900	3500	12’	6’	9	2200	1900	97	0.62	0.77
LC 090 1_ 4	43	80	160	3100	4500	12’	6’	9	2200	1900	97	0.41	0.55
LC 090 1_ 5	43	80	160	3200	4500	12’	6’	9	2200	1900	97	0.33	0.47
LC 090 1_ 7	43	80	160	4000	4500	12’	6’	9	2200	1900	97	0.26	0.40
LC 090 1_ 10	37	70	150	4000	6000	12’	6’	9	2200	1900	97	0.21	0.35
LC 090 2_ 9	37	70	150	2900	3500	15’	8’	8.5	2200	1900	94	0.47	0.61
LC 090 2_ 12	43	80	160	2900	3500	15’	8’	8.5	2200	1900	94	0.44	0.58
LC 090 2_ 15	43	80	160	2900	3500	15’	8’	8.5	2200	1900	94	0.43	0.57
LC 090 2_ 16	43	80	160	3100	4500	15’	8’	8.5	2200	1900	94	0.31	0.45
LC 090 2_ 20	43	80	160	3200	4500	15’	8’	8.5	2200	1900	94	0.26	0.40
LC 090 2_ 25	43	80	160	3200	4500	15’	8’	8.5	2200	1900	94	0.26	0.40
LC 090 2_ 28	43	80	160	4000	4500	15’	8’	8.5	2200	1900	94	0.22	0.36
LC 090 2_ 30	37	70	150	4000	6000	15’	8’	8.5	2200	1900	94	0.20	0.34
LC 090 2_ 35	43	80	160	4000	4500	15’	8’	8.5	2200	1900	94	0.22	0.36
LC 090 2_ 40	43	80	160	4000	6000	15’	8’	8.5	2200	1900	94	0.20	0.34
LC 090 2_ 50	43	80	160	4000	6000	15’	8’	8.5	2200	1900	94	0.20	0.34
LC 090 2_ 70	43	80	160	4000	6000	15’	8’	8.5	2200	1900	94	0.20	0.34
LC 090 2_ 100	37	70	150	4000	6000	15’	8’	8.5	2200	1900	94	0.19	0.34

www.redukto-mezi.ru

LC 120

50D ... 130A1

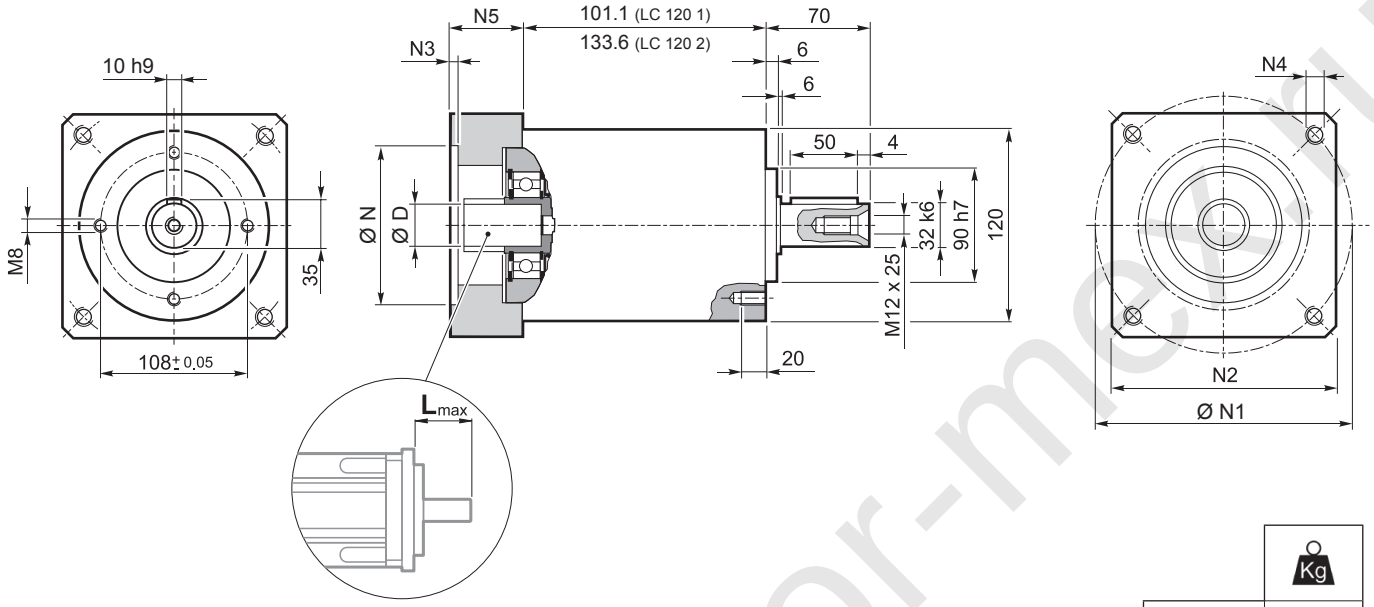

	Kg
LC 120 1	9.6
LC 120 2	12.1

	D									N	N1	N2	N3	N4	N5	L_{max}
50D	14	15	15.875	16	19	–	–	–	–	50	95	100	5	M6x14	28	40
55A	14	15	15.875	16	19	–	–	–	–	55.5	125.7	105	5	M6x16	28	40
60A2	14	15	15.875	16	19	–	–	–	–	60	75	100	5	M5x14	28	40
60AH2	14	15	15.875	16	19	–	–	–	–	60	75	100	5	6.5	33	40
60B1	14	15	15.875	16	19	–	–	–	–	60	85	100	6.5	M5x14	28	40
70A1	14	15	15.875	16	19	–	–	–	–	70	85	100	5	M6x14	28	40
70AH1	14	15	15.875	16	19	–	–	–	–	70	85	100	5	6	33	40
70B1	14	15	15.875	16	19	–	–	–	–	70	90	100	6.5	M5x12	28	40
80A1	14	15	15.875	16	19	–	–	–	–	80	100	100	5	M6x16	28	40
80AH1	14	15	15.875	16	19	–	–	–	–	80	100	100	5	6.5	28	40
95A	14	15	15.875	16	19	–	–	–	–	95	115	100	5	M8x18	28	40
95A1	14	15	15.875	16	19	22	24	–	–	95	115	100	5	M8x18	38	50
95B	14	15	15.875	16	19	–	–	–	–	95	130	115	5	M8x18	28	40
110A	14	15	15.875	16	19	–	–	–	–	110	130	115	5	M8x18	28	40
110A1	14	15	15.875	16	19	22	24	–	–	110	130	115	6.5	M8x20	38	50
110B	14	15	15.875	16	19	22	24	–	–	110	145	120	6.5	M8x20	38	50
110B1	14	15	15.875	16	19	22	24	28	–	110	145	120	6.5	M8x20	48	60
130A	14	15	15.875	16	19	22	24	–	–	130	165	140	6.5	M10x20	38	50
130A1	14	15	15.875	16	19	22	24	28	32	130	165	140	6.5	M10x25	48	60

Please contact us for different motor adapters and input shaft bore.

www.reduktor-mex.ru

LC 120

FM

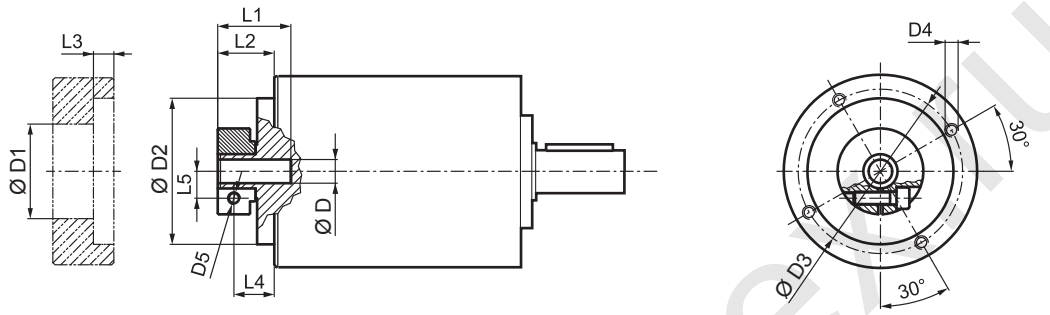

D	D1	D2	D3	D4	D5	L1	L2	L3	L4	L5
14 15 15.875 16	48	90	98	M6x15	M6	33.5	20	7.6	12.5	14.5
19	51	90	98	M6x15	M6	33.5	20	7.6	12.5	16.5
22 24	56.5	90	98	M6x15	M6	36.5	23	7.6	14	19
28	67	90	98	M6x15	M8	36.5	23	7.6	14	22.5
32	71	90	98	M6x15	M8	38	24.5	7.6	15.5	24.5

i	$M_{n\,2}$ [Nm]	$M_{a\,2}$ [Nm]	$M_{p\,2}$ [Nm]	n_1 [min^{-1}]	$n_{1\,max}$ [min^{-1}]	φ_S [arcmin]	φ_R [arcmin]	C_t [Nm/arcmin]	$R_{2\,max}$ [N]	$A_{2\,max}$ [N]	η %	J_G [kgcm²] D 14 ... 19	22 ; 24	28 ; 32
LC 120 1_ 3	95	160	300	2500	3500	12’	6’	25	3500	3000	97	2.17	2.77	3.13
LC 120 1_ 4	110	190	360	2800	4500	12’	6’	25	3500	3000	97	1.30	1.89	2.26
LC 120 1_ 5	110	190	360	3000	4500	12’	6’	25	3500	3000	97	0.96	1.56	1.92
LC 120 1_ 7	110	190	360	3500	4500	12’	6’	25	3500	3000	97	0.66	1.26	1.62
LC 120 1_ 10	95	160	300	3500	5000	12’	6’	25	3500	3000	97	0.49	1.09	1.45
LC 120 2_ 9	95	160	300	2500	3500	15’	8’	22.5	3500	3000	94	1.61	2.20	2.57
LC 120 2_ 12	110	190	360	2500	3500	15’	8’	22.5	3500	3000	94	1.51	2.10	2.47
LC 120 2_ 15	110	190	360	2500	3500	15’	8’	22.5	3500	3000	94	1.47	2.06	2.43
LC 120 2_ 16	110	190	360	2800	4500	15’	8’	22.5	3500	3000	94	0.92	1.52	1.88
LC 120 2_ 20	110	190	360	3000	4500	15’	8’	22.5	3500	3000	94	0.90	1.50	1.86
LC 120 2_ 25	110	190	360	3000	4500	15’	8’	22.5	3500	3000	94	0.71	1.30	1.67
LC 120 2_ 28	110	190	360	3500	4500	15’	8’	22.5	3500	3000	94	0.54	1.13	1.50
LC 120 2_ 30	95	160	300	3500	5000	15’	8’	22.5	3500	3000	94	0.44	1.04	1.40
LC 120 2_ 35	110	190	360	3500	4500	15’	8’	22.5	3500	3000	94	0.53	1.13	1.49
LC 120 2_ 40	110	190	360	3500	5000	15’	8’	22.5	3500	3000	94	0.43	1.03	1.39
LC 120 2_ 50	110	190	360	3500	5000	15’	8’	22.5	3500	3000	94	0.43	1.02	1.39
LC 120 2_ 70	110	190	360	3500	5000	15’	8’	22.5	3500	3000	94	0.42	1.02	1.38
LC 120 2_ 100	95	160	300	3500	5000	15’	8’	22.5	3500	3000	94	0.42	1.02	1.38

www.reduktor-mex.ru

LC 155

55A1 ... 180A1

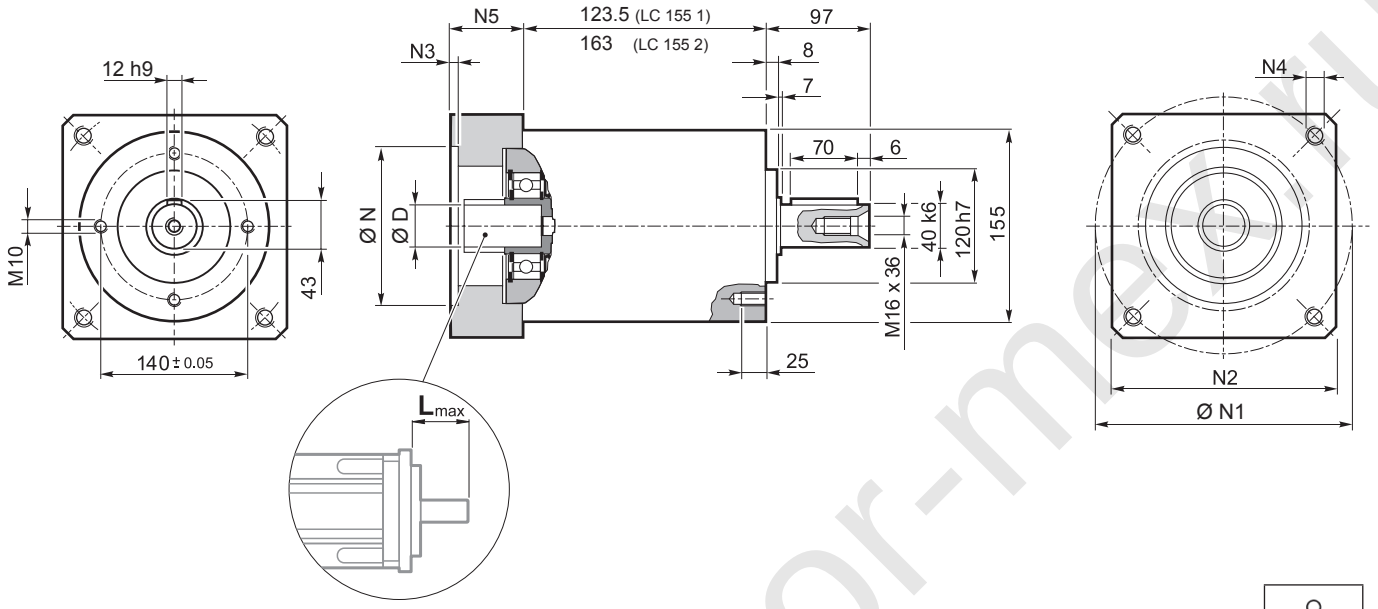

	Kg
LC 155 1	19.3
LC 155 2	24.3

	D							N	N1	N2	N3	N4	N5	L_{max}
55A1	19	–	–	–	–	–	–	55.5	125.7	130	4	M6x15	39.5	50
80A2	19	–	–	–	–	–	–	80	100	130	4	M6x15	39.5	50
95A1	19	22	24	–	–	–	–	95	115	130	4	M8x20	39.5	50
110A1	19	22	24	–	–	–	–	110	130	130	4	M8x20	39.5	50
110B1	19	22	24	–	–	–	–	110	145	130	6.5	M8x20	49.5	60
114A	19	22	24	28	32	35	38	114.3	200	170	5.5	M12x25	69.5	80
130A	19	22	24	–	–	–	–	130	165	140	4	M10x20	39.5	50
130A1	19	22	24	28	32	–	–	130	165	140	4	M10x20	49.5	60
180A	19	22	24	28	32	–	–	180	215	190	5.5	M14x25	49.5	60
180A1	19	22	24	28	32	35	38	180	215	190	5.5	M14x25	69.5	80

Please contact us for different motor adapters and input shaft bore.

www.reduktor-mex.ru

LC 155

FM

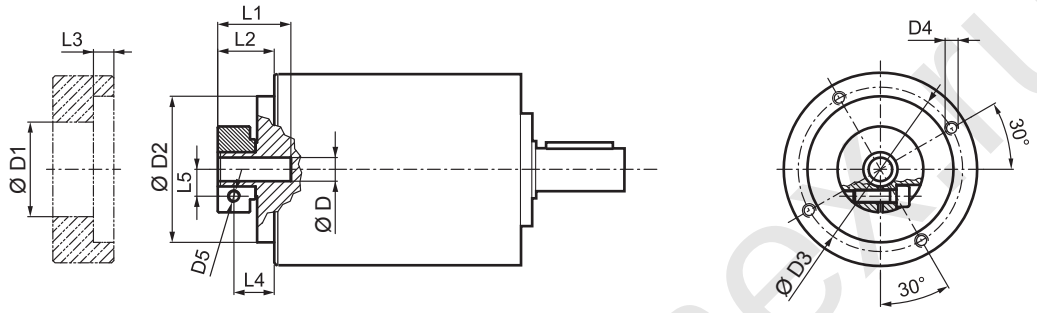

D	D1	D2	D3	D4	D5	L1	L2	L3	L4	L5
19	51	113	125.5	M8x15	M6	40	27.5	6	20	16.5
22 24	56.5	113	125.5	M8x15	M6	41	28.5	6	19.5	19
28	67	113	125.5	M8x15	M8	41	28.5	6	19.5	22.5
32	71	113	125.5	M8x15	M8	41	28.5	6	18.5	24.5
35	73	113	125.5	M8x15	M8	50	37.5	11.25	26	26
38	77.5	113	125.5	M8x15	M8	50	37.5	11.25	26	28

i	$M_{n\,2}$ [Nm]	$M_{a\,2}$ [Nm]	$M_{p\,2}$ [Nm]	n_1 [min^{-1}]	$n_{1\,max}$ [min^{-1}]	φ_S [arcmin]	φ_R [arcmin]	C_t [Nm/arcmin]	$R_{2\,max}$ [N]	$A_{2\,max}$ [N]	η %	J_G [kgcm^2] D 19	22 ; 24	28 ; 32	35 ; 38
LC 155 1 _ 3	250	380	600	2100	3600	12’	6’	43	6000	5000	97	7.99	8.19	8.54	9.90
LC 155 1 _ 4	300	450	700	2400	3600	12’	6’	43	6000	5000	97	4.66	4.87	5.23	6.57
LC 155 1 _ 5	300	450	900	2900	3600	12’	6’	43	6000	5000	97	3.32	3.53	3.88	5.23
LC 155 1 _ 7	300	450	900	3200	3600	12’	6’	43	6000	5000	97	2.14	2.35	2.70	4.05
LC 155 1 _ 10	230	350	750	3200	3600	12’	6’	43	6000	5000	97	1.45	1.66	2.01	3.36
LC 155 2 _ 9	250	380	600	2100	3600	15’	8’	37.5	6000	5000	94	5.30	5.51	5.86	7.21
LC 155 2 _ 12	300	450	700	2100	3600	15’	8’	37.5	6000	5000	94	4.93	5.14	5.49	6.84
LC 155 2 _ 15	300	450	900	2100	3600	15’	8’	37.5	6000	5000	94	4.79	4.99	5.34	6.70
LC 155 2 _ 16	300	450	700	2400	3600	15’	8’	37.5	6000	5000	94	2.97	3.18	3.53	4.88
LC 155 2 _ 20	300	450	900	2900	3600	15’	8’	37.5	6000	5000	94	2.23	2.44	2.79	4.14
LC 155 2 _ 25	300	450	900	2900	3600	15’	8’	37.5	6000	5000	94	2.18	2.39	2.74	4.09
LC 155 2 _ 28	300	450	900	3200	3600	15’	8’	37.5	6000	5000	94	1.58	1.79	2.14	3.49
LC 155 2 _ 30	250	380	600	3200	3600	15’	8’	37.5	6000	5000	94	1.23	1.44	1.79	3.14
LC 155 2 _ 35	300	450	900	3200	3600	15’	8’	37.5	6000	5000	94	1.55	1.76	2.11	3.46
LC 155 2 _ 40	300	450	700	3200	3600	15’	8’	37.5	6000	5000	94	1.20	1.41	1.76	3.11
LC 155 2 _ 50	300	450	900	3200	3600	15’	8’	37.5	6000	5000	94	1.19	1.39	1.74	3.10
LC 155 2 _ 70	300	450	900	3200	3600	15’	8’	37.5	6000	5000	94	1.17	1.38	1.73	3.08
LC 155 2 _ 100	230	350	750	3200	3600	15’	8’	37.5	6000	5000	94	1.17	1.38	1.73	3.08

www.redukTor-mex.ru

LC 070P

25AH ... 80A

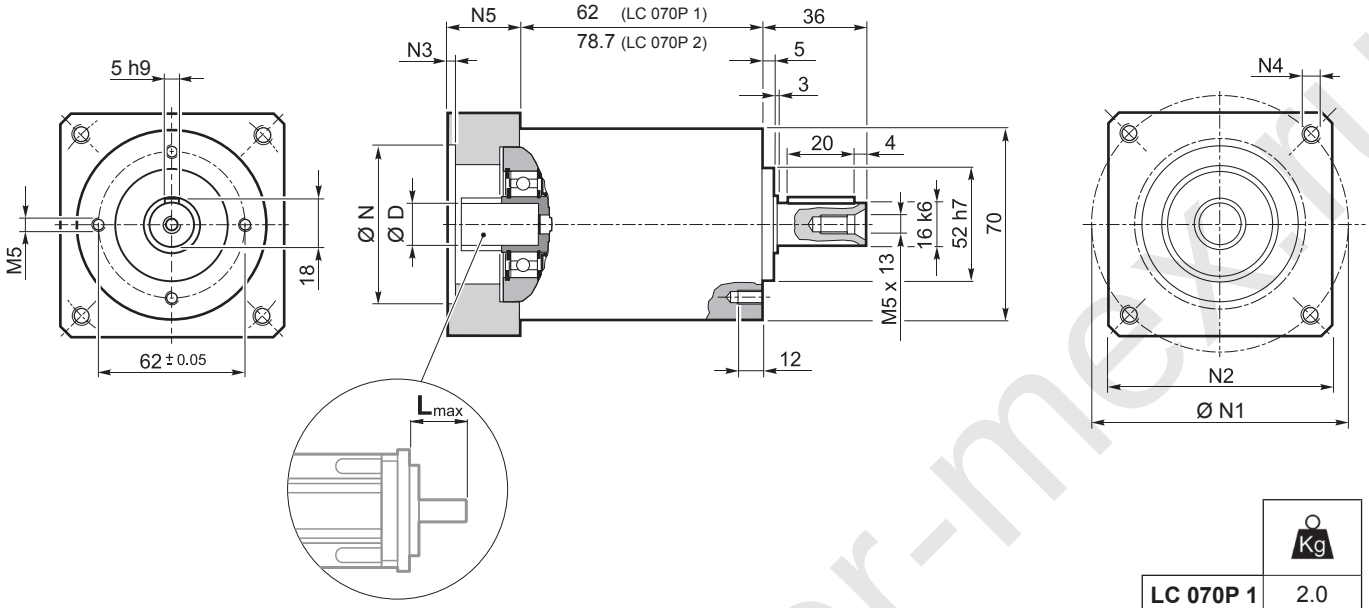

	Kg
LC 070P 1	2.0
LC 070P 2	2.3

	D										N	N1 min	N1 max	N2	N3	N4	N5	L_{max}
25AH	6.35	7	8	9	9.52	–	–	–	–	–	25	39	56					
26AH	6.35	7	8	9	9.52	–	–	–	–	–	26	39	56					
28AH	6.35	7	8	9	9.52	–	–	–	–	–	28	39	56					
30AH	6.35	7	8	9	9.52	–	–	–	–	–	30	39	56					
32AH	6.35	7	8	9	9.52	–	–	–	–	–	32	39	56	65	3.5	4.5	25	25
34AH	6.35	7	8	9	9.52	–	–	–	–	–	34	40	56					
36AH	6.35	7	8	9	9.52	–	–	–	–	–	36	42	56					
39AH	6.35	7	8	9	9.52	–	–	–	–	–	39	45	56					
40AH	6.35	7	8	9	9.52	–	–	–	–	–	40	46	56					
38B	6.35	7	8	9	9.52	10	11	12	12.7	–	38.1	66.6		60	3	M4x10	18	25
40B	6.35	7	8	9	9.52	10	11	12	12.7	–	40	63		60	3	M4x10	18	25
50A	6.35	7	8	9	9.52	10	11	12	12.7	–	50	60		60	3	M4x10	18	25
50B	6.35	7	8	9	9.52	10	11	12	12.7	14	50	65		60	3	M5x12	23	30
50BH	6.35	7	8	9	9.52	10	11	12	12.7	14	50	65		65	3	5.5	25	32
50C	6.35	7	8	9	9.52	10	11	12	12.7	14	50	70		60	3	M4x10	23	30
55MH	6.35	7	8	9	9.52	10	11	12	12.7	–	55	80		65	2	5.5	16	23
60A	6.35	7	8	9	9.52	10	11	12	12.7	–	60	75		65	3	M5x12	18	25
60A1	6.35	7	8	9	9.52	10	11	12	12.7	14	60	75		65	3	M5x12	23	30
60B	6.35	7	8	9	9.52	10	11	12	12.7	14	60	85		75	3	M5x12	23	30
60C	6.35	7	8	9	9.52	10	11	12	12.7	14	60	90		75	3	M5x12	23	30
70A	6.35	7	8	9	9.52	10	11	12	12.7	14	70	85		75	3	M6x15	23	30
70B	6.35	7	8	9	9.52	10	11	12	12.7	14	70	90		75	5	M5x12	23	30
73A	6.35	7	8	9	9.52	10	11	12	12.7	14	73	98.4		85	3	M5x12	25	32
80A	6.35	7	8	9	9.52	10	11	12	12.7	14	80	100		85	3	M6x15	23	30

Please contact us for different motor adapters and input shaft bore.

www.reduktor-mexru

LC 070P

FM

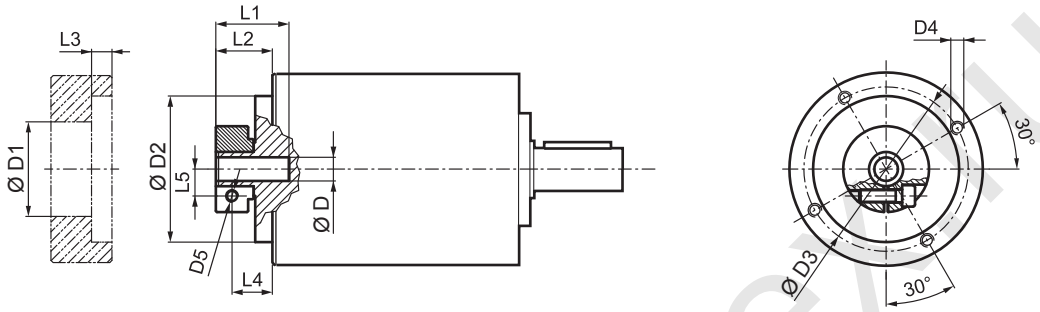

D				D1	D2	D3	D4	D5	L1	L2	L3	L4	L5
6.35	7			32.5	50	42.5	M4x8	M4	21.7	13.2	3	8.2	8
8	9	9.52	10	32.5	50	42.5	M4x8	M4	21.7	13.2	3	8.2	9
11	12	12.7		35.5	50	42.5	M4x8	M4	22	13.5	3	8.5	11
14				35.5	50	42.5	M4x8	M4	25	17	3	10.2	11.5

i	$M_{n\,2}$ [Nm]	$M_{a\,2}$ [Nm]	$M_{p\,2}$ [Nm]	n_1 [min^{-1}]	$n_{1\,max}$ [min^{-1}]	φ_S [arcmin]	φ_R [arcmin]	C_t [Nm/arcmin]	$R_{2\,max}$ [N]	$A_{2\,max}$ [N]	η %	J_G [kgcm²] D 6 ... 9.52	J_G [kgcm²] D 11 ... 14
LC 070P 1_ 3	29	55	60	3300	4000	12'	6'	3	1300	1400	97	0.12	0.14
LC 070P 1_ 4	30	45	70	3500	5000	12'	6'	3	1300	1400	97	0.08	0.10
LC 070P 1_ 5	25	40	70	3500	5000	12'	6'	3	1300	1400	97	0.06	0.09
LC 070P 1_ 7	25	40	70	4000	5000	12'	6'	3	1300	1400	97	0.05	0.07
LC 070P 1_ 10	18	30	60	4000	6000	12'	6'	3	3500	1400	97	0.04	0.06
LC 070P 2_ 9	29	55	60	3300	4000	15'	8'	2.5	1300	1400	94	0.11	0.13
LC 070P 2_ 12	29	55	70	3300	4000	15'	8'	2.5	1300	1400	94	0.10	0.13
LC 070P 2_ 15	29	55	70	3300	4000	15'	8'	2.5	1300	1400	94	0.10	0.12
LC 070P 2_ 16	30	45	70	3500	5000	15'	8'	2.5	1300	1400	94	0.07	0.09
LC 070P 2_ 20	30	45	70	3500	5000	15'	8'	2.5	1300	1400	94	0.06	0.08
LC 070P 2_ 25	30	45	70	3500	5000	15'	8'	2.5	1300	1400	94	0.06	0.08
LC 070P 2_ 28	30	45	70	4000	6000	15'	8'	2.5	1300	1400	94	0.05	0.07
LC 070P 2_ 30	29	55	60	4000	6000	15'	8'	2.5	1300	1400	94	0.04	0.06
LC 070P 2_ 35	30	45	70	4000	6000	15'	8'	2.5	1300	1400	94	0.05	0.07
LC 070P 2_ 40	30	45	70	4000	6000	15'	8'	2.5	1300	1400	94	0.04	0.06
LC 070P 2_ 50	30	45	70	4000	6000	15'	8'	2.5	1300	1400	94	0.04	0.06
LC 070P 2_ 70	30	45	70	4000	6000	15'	8'	2.5	1300	1400	94	0.04	0.06
LC 070P 2_ 100	18	30	60	4000	6000	15'	8'	2.5	1300	1400	94	0.04	0.06

www.redukto-mex.hu

LC 090P

40B1 ... 110B1

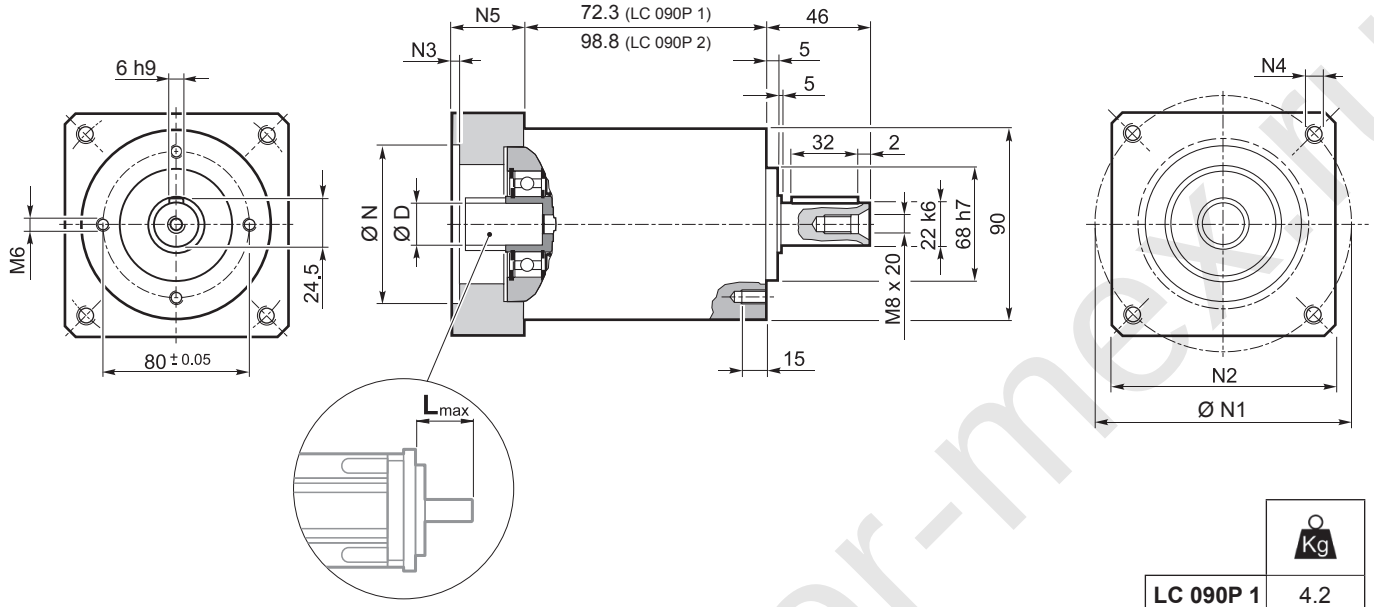

	Kg
LC 090P 1	4.2
LC 090P 2	5.3

	D											N	N1	N2	N3	N4	N5	L_{max}
40B1	9	9.52	11	12	12.7	14	–	–	–	–	–	40	63	80	4	M4x10	34	40
45A	9	9.52	11	12	12.7	–	–	–	–	–	–	45	63	80	4	M4x10	34	40
50B1	9	9.52	11	12	12.7	14	–	–	–	–	–	50	65	80	4	M5x16	34	40
50BH1	9	9.52	11	12	12.7	14	–	–	–	–	–	50	65	80	4	5.5	34	40
50C1	9	9.52	11	12	12.7	14	–	–	–	–	–	50	70	80	4	M4x10	34	40
50D	9	9.52	11	12	12.7	14	–	–	–	–	–	50	95	80	4	M6x10	34	40
55A	9	9.52	11	12	12.7	14	15.875	16	17	19	19.05	55.5	125.7	105	4	M6x16	34	40
60A2	9	9.52	11	12	12.7	14	–	–	–	–	–	60	75	80	4	M5x16	34	40
60AH2	9	9.52	11	12	12.7	14	–	–	–	–	–	60	75	90	4	5.5	34	40
60B1	9	9.52	11	12	12.7	14	15.875	16	–	–	–	60	85	80	4	M5x16	34	40
60C1	9	9.52	11	12	12.7	14	15.875	16	–	–	–	60	90	80	4	M5x16	34	40
70A1	9	9.52	11	12	12.7	14	15.875	16	17	19	19.05	70	85	80	4	M6x20	34	40
70AH1	9	9.52	11	12	12.7	14	15.875	16	17	19	19.05	70	85	90	4	6.5	34	40
70B1	9	9.52	11	12	12.7	14	15.875	16	17	19	19.05	70	90	80	4	M5x16	34	40
73A1	9	9.52	11	12	12.7	14	–	–	–	–	–	73	98.4	85	4	M5x16	34	40
80A1	9	9.52	11	12	12.7	14	15.875	16	17	19	19.05	80	100	90	4	M6x16	34	40
95A	9	9.52	11	12	12.7	14	15.875	16	17	19	19.05	95	115	100	4	M8x20	34	40
95B	9	9.52	11	12	12.7	14	15.875	16	17	19	19.05	95	130	115	4	M8x20	34	40
110A	9	9.52	11	12	12.7	14	15.875	16	17	19	19.05	110	130	115	4	M8x20	34	40
110B	9	9.52	11	12	12.7	14	15.875	16	17	19	19.05	110	145	120	6.5	M8x20	44	50
110B1	9	9.52	11	12	12.7	14	15.875	16	17	19	19.05	110	145	120	6.5	M8x20	54	60

Please contact us for different motor adapters and input shaft bore.

www.reduktor-me.ru

LC 090P

FM

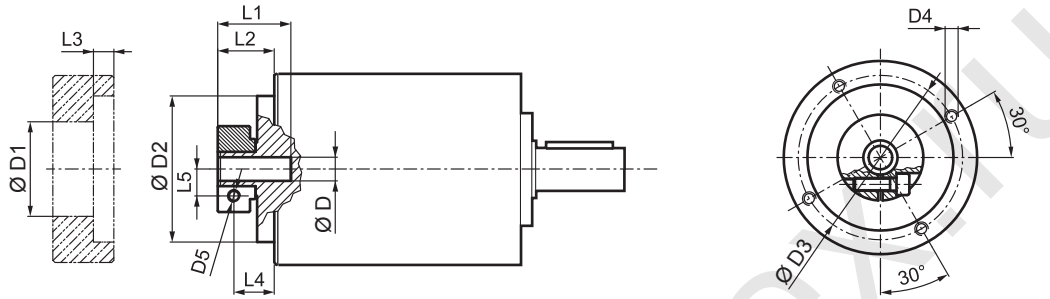

D	D1	D2	D3	D4	D5	L1	L2	L3	L4	L5
9 9.52	38	68	76.5	M6x10	M6	34	26.8	9.5	18.8	10.5
11 12 12.7	43	68	76.5	M6x10	M6	34	26.8	9.5	18.8	12.5
14 15.875 16 17	48	68	76.5	M6x10	M6	34	26.8	9.5	18.8	14.5
19 19.05	51	68	76.5	M6x10	M6	34	26.8	9.5	18.8	16.5

i	$M_{n\,2}$ [Nm]	$M_{a\,2}$ [Nm]	$M_{p\,2}$ [Nm]	n_1 [min⁻¹]	$n_{1\,max}$ [min⁻¹]	φ_S [arcmin]	φ_R [arcmin]	C_t [Nm/arcmin]	$R_{2\,max}$ [N]	$A_{2\,max}$ [N]	η %	J_G [kgcm²] D 8 ... 12.7	J_G [kgcm²] D 14 ... 19
LC 090P 1_ 3	65	120	150	3500	4000	12'	6'	12	2200	1900	97	0.62	0.77
LC 090P 1_ 4	60	110	160	3500	4000	12'	6'	12	2200	1900	97	0.41	0.55
LC 090P 1_ 5	50	100	160	3200	4500	12'	6'	9	2200	1900	97	0.33	0.47
LC 090P 1_ 7	50	100	160	4000	6000	12'	6'	9	2200	1900	97	0.26	0.40
LC 090P 1_ 10	40	70	150	4000	6000	12'	6'	9	2200	1900	97	0.21	0.35
LC 090P 2_ 9	65	120	150	3500	4000	15'	8'	12	2200	1900	94	0.47	0.61
LC 090P 2_ 12	65	120	160	3500	4000	15'	8'	12	2200	1900	94	0.44	0.58
LC 090P 2_ 15	65	120	160	3500	4000	15'	8'	12	2200	1900	94	0.43	0.57
LC 090P 2_ 16	60	110	160	3500	4500	15'	8'	12	2200	1900	94	0.31	0.45
LC 090P 2_ 20	60	110	160	3500	4500	15'	8'	12	2200	1900	94	0.26	0.40
LC 090P 2_ 25	50	100	160	3200	4500	15'	8'	9	2200	1900	94	0.26	0.40
LC 090P 2_ 28	50	100	160	4000	6000	15'	8'	9	2200	1900	94	0.22	0.36
LC 090P 2_ 30	65	120	150	4000	6000	15'	8'	12	2200	1900	94	0.20	0.34
LC 090P 2_ 35	50	100	160	4000	6000	15'	8'	9	2200	1900	94	0.22	0.36
LC 090P 2_ 40	60	110	160	4000	6000	15'	8'	12	2200	1900	94	0.20	0.34
LC 090P 2_ 50	50	100	160	4000	6000	15'	8'	9	2200	1900	94	0.20	0.34
LC 090P 2_ 70	50	100	160	4000	6000	15'	8'	9	2200	1900	94	0.20	0.34
LC 090P 2_ 100	40	70	150	4000	6000	15'	8'	9	2200	1900	94	0.19	0.34

www.reduktor-mezi.ru

LC 120P

50D ... 130A1

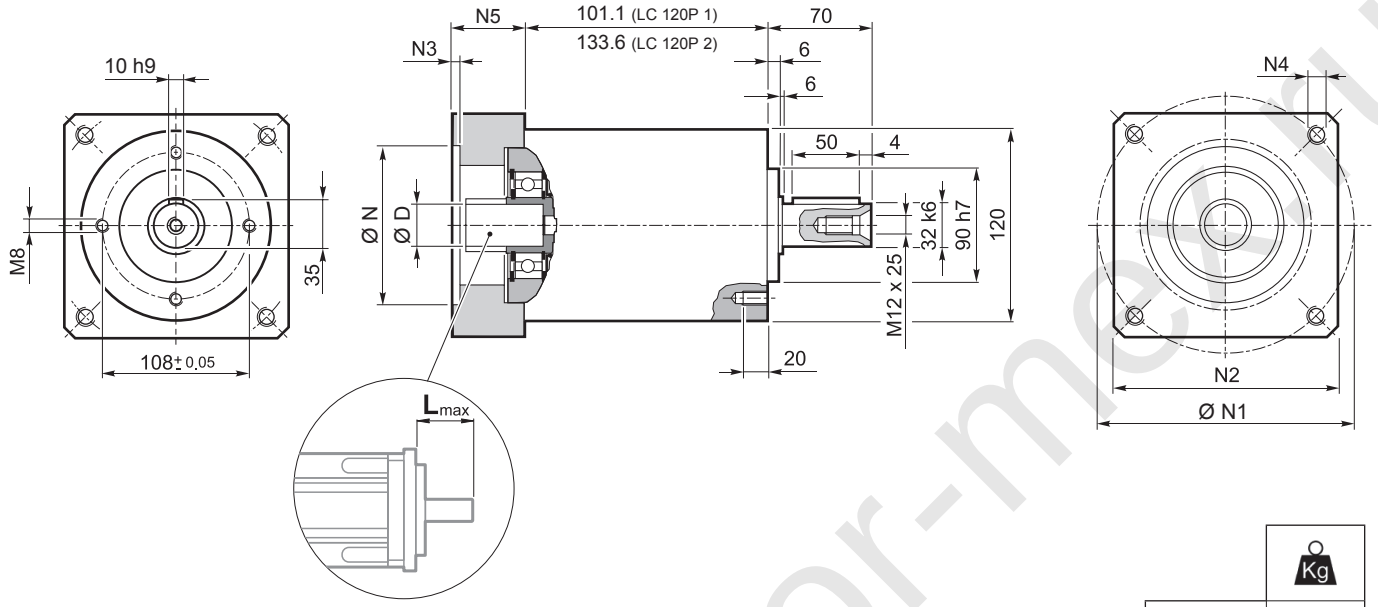

	Kg
LC 120P 1	9.6
LC 120P 2	12.1

	D									N	N1	N2	N3	N4	N5	L_{max}
50D	14	15	15.875	16	19	–	–	–	–	50	95	100	5	M6x14	28	40
55A	14	15	15.875	16	19	–	–	–	–	55.5	125.7	105	5	M6x16	28	40
60A2	14	15	15.875	16	19	–	–	–	–	60	75	100	5	M5x14	28	40
60AH2	14	15	15.875	16	19	–	–	–	–	60	75	100	5	6.5	33	40
60B1	14	15	15.875	16	19	–	–	–	–	60	85	100	6.5	M5x14	28	40
70A1	14	15	15.875	16	19	–	–	–	–	70	85	100	5	M6x14	28	40
70AH1	14	15	15.875	16	19	–	–	–	–	70	85	100	5	6	33	40
70B1	14	15	15.875	16	19	–	–	–	–	70	90	100	6.5	M5x12	28	40
80A1	14	15	15.875	16	19	–	–	–	–	80	100	100	5	M6x16	28	40
80AH1	14	15	15.875	16	19	–	–	–	–	80	100	100	5	6.5	28	40
95A	14	15	15.875	16	19	–	–	–	–	95	115	100	5	M8x18	28	40
95A1	14	15	15.875	16	19	22	24	–	–	95	115	100	5	M8x18	38	50
95B	14	15	15.875	16	19	–	–	–	–	95	130	115	5	M8x18	28	40
110A	14	15	15.875	16	19	–	–	–	–	110	130	115	5	M8x18	28	40
110A1	14	15	15.875	16	19	22	24	–	–	110	130	115	6.5	M8x20	38	50
110B	14	15	15.875	16	19	22	24	–	–	110	145	120	6.5	M8x20	38	50
110B1	14	15	15.875	16	19	22	24	28	–	110	145	120	6.5	M8x20	48	60
130A	14	15	15.875	16	19	22	24	–	–	130	165	140	6.5	M10x20	38	50
130A1	14	15	15.875	16	19	22	24	28	32	130	165	140	6.5	M10x25	48	60

Please contact us for different motor adapters and input shaft bore.

www.reduktor-mex.ru

LC 120P

FM

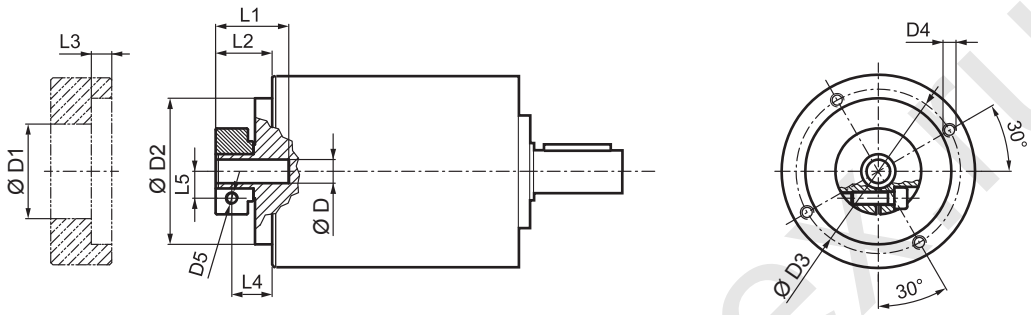

D	D1	D2	D3	D4	D5	L1	L2	L3	L4	L5
14 15 15.875 16	48	90	98	M6x15	M6	33.5	20	7.6	12.5	14.5
19	51	90	98	M6x15	M6	33.5	20	7.6	12.5	16.5
22 24	56.5	90	98	M6x15	M6	36.5	23	7.6	14	19
28	67	90	98	M6x15	M8	36.5	23	7.6	14	22.5
32	71	90	98	M6x15	M8	38	24.5	7.6	15.5	24.5

i	$M_{n\,2}$ [Nm]	$M_{a\,2}$ [Nm]	$M_{p\,2}$ [Nm]	n_1 [min^{-1}]	$n_{1\,max}$ [min^{-1}]	φ_S [arcmin]	φ_R [arcmin]	C_t [Nm/arcmin]	$R_{2\,max}$ [N]	$A_{2\,max}$ [N]	η %	J_G [kgcm²] D 14 ... 19	22 ; 24	28 ; 32
LC 120P 1_ 3	155	280	300	3000	4000	12'	6'	30	3500	3000	97	2.17	2.77	3.13
LC 120P 1_ 4	155	300	360	3000	4500	12'	6'	30	3500	3000	97	1.30	1.89	2.26
LC 120P 1_ 5	125	240	360	3000	4500	12'	6'	25	3500	3000	97	0.96	1.56	1.92
LC 120P 1_ 7	125	240	360	3500	4500	12'	6'	25	3500	3000	97	0.66	1.26	1.62
LC 120P 1_ 10	100	160	300	3500	5000	12'	6'	25	3500	3000	97	0.49	1.09	1.45
LC 120P 2_ 9	155	280	300	3000	4000	15'	8'	30	3500	3000	94	1.61	2.20	2.57
LC 120P 2_ 12	155	300	360	3000	4000	15'	8'	30	3500	3000	94	1.51	2.10	2.47
LC 120P 2_ 15	155	300	360	3000	4000	15'	8'	30	3500	3000	94	1.47	2.06	2.43
LC 120P 2_ 16	155	300	360	3000	4500	15'	8'	30	3500	3000	94	0.92	1.52	1.88
LC 120P 2_ 20	155	300	360	3000	4500	15'	8'	30	3500	3000	94	0.90	1.50	1.86
LC 120P 2_ 25	125	240	360	3000	4500	15'	8'	22.5	3500	3000	94	0.71	1.30	1.67
LC 120P 2_ 28	125	240	360	3500	5000	15'	8'	22.5	3500	3000	94	0.54	1.13	1.50
LC 120P 2_ 30	155	300	300	3500	5000	15'	8'	30	3500	3000	94	0.44	1.04	1.40
LC 120P 2_ 35	125	240	360	3500	5000	15'	8'	22.5	3500	3000	94	0.53	1.13	1.49
LC 120P 2_ 40	155	300	360	3500	5000	15'	8'	30	3500	3000	94	0.43	1.03	1.39
LC 120P 2_ 50	125	240	360	3500	5000	15'	8'	22.5	3500	3000	94	0.43	1.02	1.39
LC 120P 2_ 70	125	240	360	3500	5000	15'	8'	22.5	3500	3000	94	0.42	1.02	1.38
LC 120P 2_ 100	100	160	300	3500	5000	15'	8'	22.5	3500	3000	94	0.42	1.02	1.38

www.reduktor-mexico.ru

LC 155P

55A1 ... 180A1

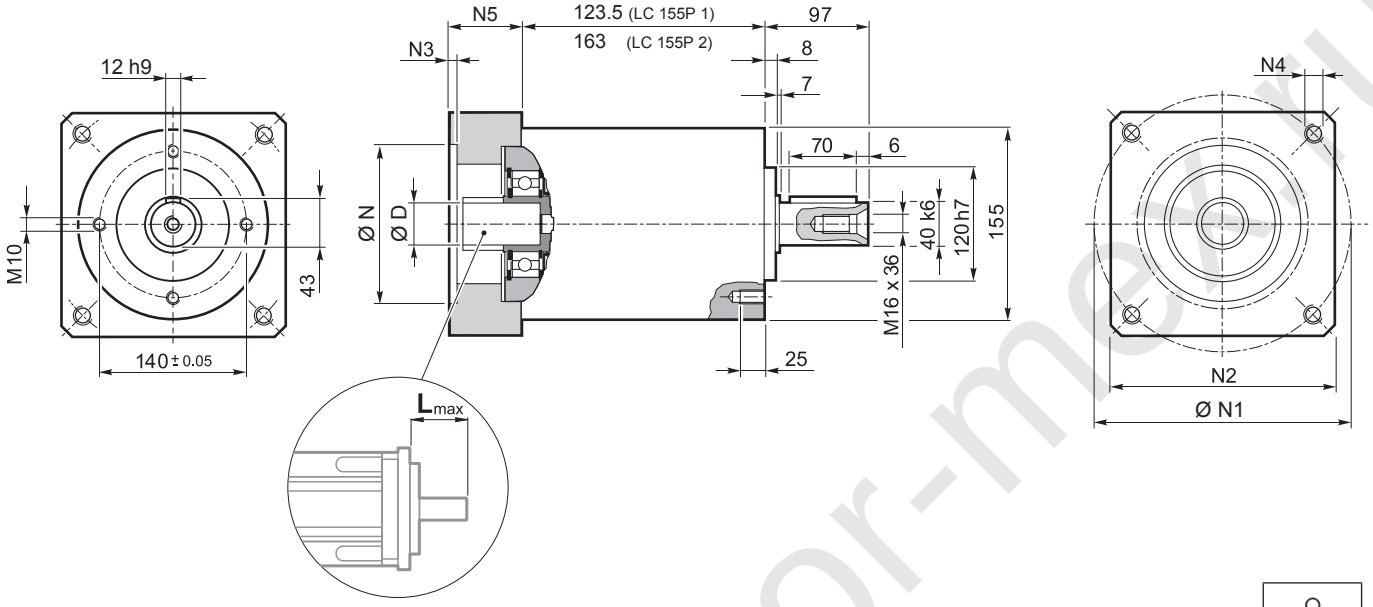

	Kg
LC 155P 1	19.3
LC 155P 2	24.3

	D							N	N1	N2	N3	N4	N5	L_{max}
55A1	19	–	–	–	–	–	–	55.5	125.7	130	4	M6x15	39.5	50
80A2	19	–	–	–	–	–	–	80	100	130	4	M6x15	39.5	50
95A1	19	22	24	–	–	–	–	95	115	130	4	M8x20	39.5	50
110A1	19	22	24	–	–	–	–	110	130	130	4	M8x20	39.5	50
110B1	19	22	24	–	–	–	–	110	145	130	6.5	M8x20	49.5	60
114A	19	22	24	28	32	35	38	114.3	200	170	5.5	M12x25	69.5	80
130A	19	22	24	–	–	–	–	130	165	140	4	M10x20	39.5	50
130A1	19	22	24	28	32	–	–	130	165	140	4	M10x20	49.5	60
180A	19	22	24	28	32	–	–	180	215	190	5.5	M14x25	49.5	60
180A1	19	22	24	28	32	35	38	180	215	190	5.5	M14x25	69.5	80

Please contact us for different motor adapters and input shaft bore.

www.reduktor-mex.ru

LC 155P

FM

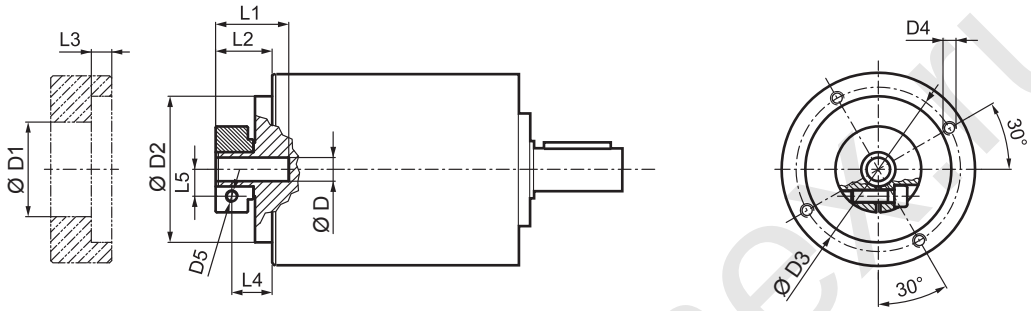

D	D1	D2	D3	D4	D5	L1	L2	L3	L4	L5
19	51	113	125.5	M8x15	M6	40	27.5	6	20	16.5
22 24	56.5	113	125.5	M8x15	M6	41	28.5	6	19.5	19
28	67	113	125.5	M8x15	M8	41	28.5	6	19.5	22.5
32	71	113	125.5	M8x15	M8	41	28.5	6	18.5	24.5
35	73	113	125.5	M8x15	M8	50	37.5	11.25	26	26
38	77.5	113	125.5	M8x15	M8	50	37.5	11.25	26	28

i	$M_{n\,2}$ [Nm]	$M_{a\,2}$ [Nm]	$M_{p\,2}$ [Nm]	n_1 [min^{-1}]	$n_{1\,max}$ [min^{-1}]	φ_S [arcmin]	φ_R [arcmin]	C_t [Nm/arcmin]	$R_{2\,max}$ [N]	$A_{2\,max}$ [N]	η %	J_G [kgcm^2] D 19	22 ; 24	28 ; 32	35 ; 38
LC 155P 1 _ 3	250	380	600	2100	3600	12'	6'	50	6000	5000	97	7.99	8.19	8.54	9.90
LC 155P 1 _ 4	350	500	1000	2400	3600	12'	6'	50	6000	5000	97	4.66	4.87	5.23	6.57
LC 155P 1 _ 5	350	500	1000	2900	3600	12'	6'	50	6000	5000	97	3.32	2.53	3.53	5.23
LC 155P 1 _ 7	350	500	1000	3200	3600	12'	6'	50	6000	5000	97	2.14	2.35	2.70	4.05
LC 155P 1 _ 10	230	350	750	3200	3600	12'	6'	50	6000	5000	97	1.14	1.66	2.01	3.36
LC 155P 2 _ 9	250	380	600	2100	3600	15'	8'	48	6000	5000	94	5.30	5.51	5.86	7.21
LC 155P 2 _ 12	450	700	1000	2100	3600	15'	8'	48	6000	5000	94	4.93	5.14	5.49	6.84
LC 155P 2 _ 15	450	700	1000	2100	3600	15'	8'	48	6000	5000	94	4.79	4.99	5.34	6.70
LC 155P 2 _ 16	450	700	1000	2400	3600	15'	8'	48	6000	5000	94	2.97	3.18	3.53	4.88
LC 155P 2 _ 20	450	700	1000	2900	3600	15'	8'	48	6000	5000	94	2.23	2.44	2.79	4.14
LC 155P 2 _ 25	450	700	1000	2900	3600	15'	8'	48	6000	5000	94	2.18	2.39	2.74	4.09
LC 155P 2 _ 28	450	700	1000	3200	3600	15'	8'	48	6000	5000	94	1.58	1.79	2.14	3.49
LC 155P 2 _ 30	250	380	750	3200	3600	15'	8'	48	6000	5000	94	1.23	1.44	1.79	3.14
LC 155P 2 _ 35	450	700	1000	3200	3600	15'	8'	48	6000	5000	94	1.55	1.76	2.11	3.46
LC 155P 2 _ 40	450	700	1000	3200	3600	15'	8'	48	6000	5000	94	1.20	1.41	1.76	3.11
LC 155P 2 _ 50	450	700	1000	3200	3600	15'	8'	48	6000	5000	94	1.19	1.39	1.74	3.10
LC 155P 2 _ 70	450	700	1000	3200	3600	15'	8'	48	6000	5000	94	1.17	1.38	1.73	3.08
LC 155P 2 _ 100	230	350	750	3200	3600	15'	8'	48	6000	5000	94	1.17	1.38	1.73	3.08

www.redukto-mex.ru