5.3 DIMENSIONS AND TECHNICAL SPECIFICATIONS

TR 053

IS

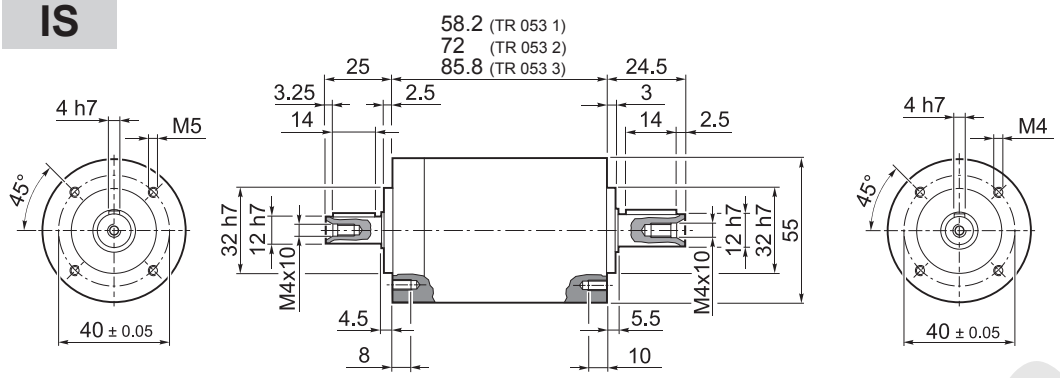

	Kg
TR 053 1	0.8
TR 053 2	1.0
TR 053 3	1.3

25AH ... 80A

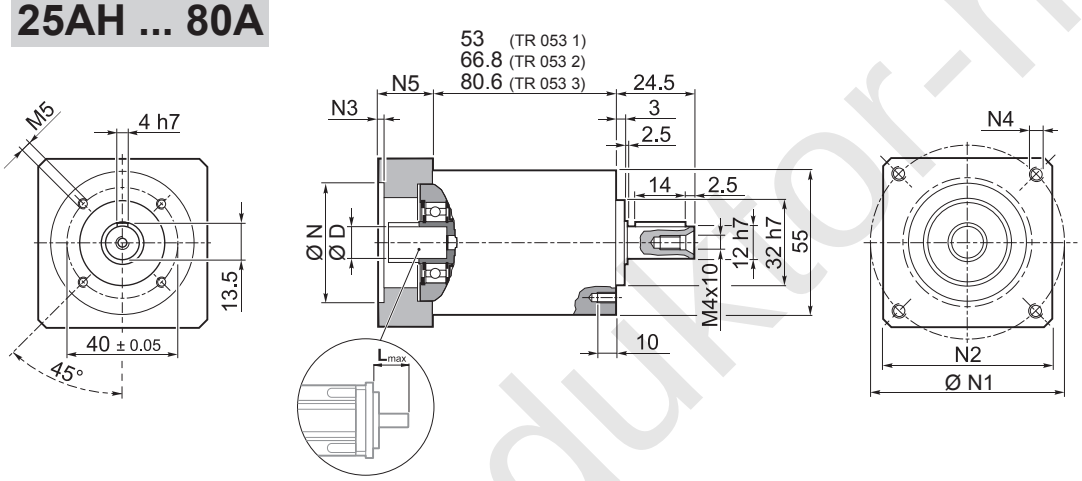

	Kg
TR 053 1	0.8
TR 053 2	1.0
TR 053 3	1.3

	D											N	N1 min	N1 max	N2	N3	N4	N5	L_{max}
25AH	6	6.35	7	8	9	9.52	–	–	–	–	–	25	36	48	55	3.5	4.5	25	25
26AH	6	6.35	7	8	9	9.52	–	–	–	–	–	26	36	48					
28AH	6	6.35	7	8	9	9.52	–	–	–	–	–	28	36	48					
30AH	6	6.35	7	8	9	9.52	–	–	–	–	–	30	36	48					
32AH	6	6.35	7	8	9	9.52	–	–	–	–	–	32	38	48					
34AH	6	6.35	7	8	9	9.52	–	–	–	–	–	34	40	48					
36AH	6	6.35	7	8	9	9.52	–	–	–	–	–	36	42	48					
38AH	6	6.35	7	8	9	9.52	–	–	–	–	–	38	44	48					
40AH	6	6.35	7	8	9	9.52	–	–	–	–	–	40	46	48					
38B	6	6.35	7	8	9	9.52	10	11	12	12.7	–	38.1	66.6		60	3	M4x10	18	25
40B	6	6.35	7	8	9	9.52	10	11	12	12.7	–	40	63		60	3	M4x10	18	25
50A	6	6.35	7	8	9	9.52	10	11	12	12.7	–	50	60		60	3	M4x10	18	25
50B	6	6.35	7	8	9	9.52	10	11	12	12.7	14	50	65		60	3	M5x12	23	30
50BH	6	6.35	7	8	9	9.52	10	11	12	12.7	14	50	65		60	4	5.5	23	30
50C	6	6.35	7	8	9	9.52	10	11	12	12.7	14	50	70		60	3	M4x10	23	30
50MH	6	6.35	7	8	9	9.52	10	11	12	12.7	–	50	65		55	2	5.5	16	23
60A	6	6.35	7	8	9	9.52	10	11	12	12.7	–	60	75		65	3	M5x12	18	25
60AH	6	6.35	7	8	9	9.52	10	11	12	12.7	–	60	75		65	3	5.5	18	25
60A1	6	6.35	7	8	9	9.52	10	11	12	12.7	14	60	75		65	3	M5x12	23	30
60AH1	6	6.35	7	8	9	9.52	10	11	12	12.7	14	60	75		65	3	5.5	23	30
60B	6	6.35	7	8	9	9.52	10	11	12	12.7	14	60	85		75	3	M5x12	23	30
60C	6	6.35	7	8	9	9.52	10	11	12	12.7	14	60	90		75	3	M5x12	23	30
70A	6	6.35	7	8	9	9.52	10	11	12	12.7	14	70	85		75	3	M6x15	23	30
70B	6	6.35	7	8	9	9.52	10	11	12	12.7	14	70	90		75	5	M5x12	23	30
73A	6	6.35	7	8	9	9.52	10	11	12	12.7	14	73	98.4		85	3	M5x12	25	32
80A	6	6.35	7	8	9	9.52	10	11	12	12.7	14	80	100		85	3	M6x15	23	30

Please contact us for different motor adapters and input shaft bore.

www.redukTor-mex.ru

TR 053

FM

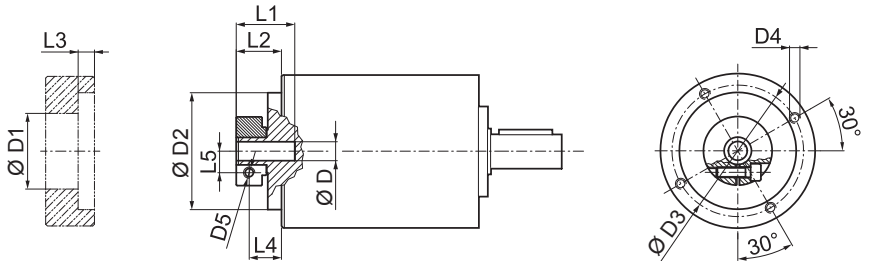

D				D1	D2	D3	D4	D5	L1	L2	L3	L4	L5
6	6.35	7		32.5	50	42.5	M4x8	M4	20.2	13.2	3	8.7	8
8	9	9.52	10	32.5	50	42.5	M4x8	M4	20.2	13.2	3	7.8	9
11	12	12.7		35.5	50	42.5	M4x8	M4	20.5	13.5	3	8.5	11
14				35.5	50	42.5	M4x8	M4	24	17	3	10.2	11.5

i	$M_{n\,2}$ [Nm]	$M_{a\,2}$ [Nm]	$M_{p\,2}$ [Nm]	n_1 [min^{-1}]	$n_{1\,max}$ [min^{-1}]	φ_S [arcmin]	C_t [Nm/arcmin]	$R_{1\,max}$ [N]	$R_{2\,max}$ [N]	$A_{2\,max}$ [N]	η %	J_G [kgcm^2] D 6 ... 9.52	J_G [kgcm^2] D 10 ... 14
TR 053 1_3	12	22	40	3300	4000	5'	1.0	200	500	600	97	0.06	0.08
TR 053 1_4	15	28	45	3500	5000	5'	1.0	200	500	600	97	0.05	0.06
TR 053 1_5	15	28	45	3500	5000	5'	1.0	200	500	600	97	0.04	0.06
TR 053 1_6	15	28	45	3500	5000	5'	1.0	200	500	600	97	0.03	0.05
TR 053 1_7	15	28	45	4000	6000	5'	1.0	200	500	600	97	0.03	0.05
TR 053 1_9	12	22	40	4000	6000	5'	1.0	200	500	600	97	0.03	0.05
TR 053 2_12	20	30	60	3300	4000	5'	0.9	200	500	600	94	0.06	0.08
TR 053 2_15	20	30	60	3300	4000	5'	0.9	200	500	600	94	0.06	0.08
TR 053 2_16	20	30	60	3500	5000	5'	0.9	200	500	600	94	0.05	0.06
TR 053 2_20	20	30	60	3500	5000	5'	0.9	200	500	600	94	0.04	0.06
TR 053 2_25	20	30	60	3500	5000	5'	0.9	200	500	600	94	0.04	0.06
TR 053 2_28	20	30	60	4000	6000	5'	0.9	200	500	600	94	0.03	0.05
TR 053 2_35	20	30	60	4000	6000	5'	0.9	200	500	600	94	0.03	0.05
TR 053 2_36	15	28	45	4000	6000	5'	0.9	200	500	600	94	0.03	0.05
TR 053 2_45	20	30	60	4000	6000	5'	0.9	200	500	600	94	0.03	0.05
TR 053 2_81	12	22	40	4000	6000	5'	0.9	200	500	600	94	0.03	0.05
TR 053 3_48	20	30	60	4000	5000	7'	0.7	200	500	600	91	0.05	0.07
TR 053 3_60	20	30	60	3500	5000	7'	0.7	200	500	600	91	0.05	0.07
TR 053 3_64	20	30	60	3500	5000	7'	0.7	200	500	600	91	0.05	0.06
TR 053 3_75	20	30	60	3500	5000	7'	0.7	200	500	600	91	0.04	0.06
TR 053 3_80	20	30	60	3500	5000	7'	0.7	200	500	600	91	0.05	0.06
TR 053 3_84	20	30	60	4000	6000	7'	0.7	200	500	600	91	0.03	0.05
TR 053 3_100	20	30	60	3500	5000	7'	0.7	200	500	600	91	0.04	0.06
TR 053 3_112	20	30	60	4000	6000	7'	0.7	200	500	600	91	0.03	0.05
TR 053 3_125	20	30	60	3500	5000	7'	0.7	200	500	600	91	0.04	0.06
TR 053 3_140	20	30	60	4000	6000	7'	0.7	200	500	600	91	0.03	0.05
TR 053 3_144	20	30	60	4000	6000	7'	0.7	200	500	600	91	0.03	0.05
TR 053 3_175	20	30	60	4000	6000	7'	0.7	200	500	600	91	0.03	0.05
TR 053 3_180	20	30	60	4000	6000	7'	0.7	200	500	600	91	0.03	0.05
TR 053 3_216	20	30	60	3500	5000	7'	0.7	200	500	600	91	0.03	0.05
TR 053 3_225	20	30	60	4000	6000	7'	0.7	200	500	600	91	0.03	0.05
TR 053 3_245	20	30	60	4000	6000	7'	0.7	200	500	600	91	0.03	0.05
TR 053 3_252	20	30	60	4000	6000	7'	0.7	200	500	600	91	0.05	0.06
TR 053 3_324	20	30	60	4000	6000	7'	0.7	200	500	600	91	0.03	0.05
TR 053 3_405	20	30	60	4000	6000	7'	0.7	200	500	600	91	0.03	0.05
TR 053 3_567	20	30	60	4000	6000	7'	0.7	200	500	600	91	0.03	0.05
TR 053 3_729	12	22	40	4000	6000	7'	0.7	200	500	600	91	0.03	0.05

TR

www.redukt-r-mex.ru

TR K 053

25AH ... 80A

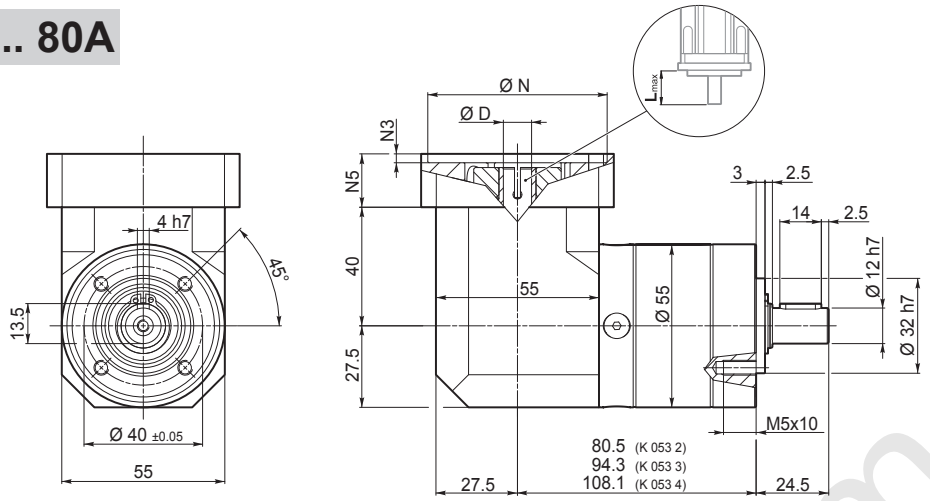

	Kg
TR K 053 2	1.3
TR K 053 3	1.5
TR K 053 4	1.8

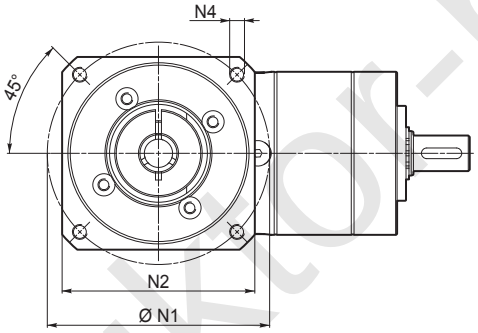

	D											N	N1 min	N1 max	N2	N3	N4	N5	L_{max}
25AH	6	6.35	7	8	9	9.52	–	–	–	–	–	25	36	48					
26AH	6	6.35	7	8	9	9.52	–	–	–	–	–	26	36	48					
28AH	6	6.35	7	8	9	9.52	–	–	–	–	–	28	36	48					
30AH	6	6.35	7	8	9	9.52	–	–	–	–	–	30	36	48					
32AH	6	6.35	7	8	9	9.52	–	–	–	–	–	32	38	48	55	3.5	4.5	25	25
34AH	6	6.35	7	8	9	9.52	–	–	–	–	–	34	40	48					
36AH	6	6.35	7	8	9	9.52	–	–	–	–	–	36	42	48					
38AH	6	6.35	7	8	9	9.52	–	–	–	–	–	38	44	48					
40AH	6	6.35	7	8	9	9.52	–	–	–	–	–	40	46	48					
38B	6	6.35	7	8	9	9.52	10	11	12	12.7	–	38.1	66.6		60	3	M4x10	18	25
40B	6	6.35	7	8	9	9.52	10	11	12	12.7	–	40	63		60	3	M4x10	18	25
50A	6	6.35	7	8	9	9.52	10	11	12	12.7	–	50	60		60	3	M4x10	18	25
50B	6	6.35	7	8	9	9.52	10	11	12	12.7	14	50	65		60	3	M5x12	23	30
50BH	6	6.35	7	8	9	9.52	10	11	12	12.7	14	50	65		60	4	5.5	23	30
50C	6	6.35	7	8	9	9.52	10	11	12	12.7	14	50	70		60	3	M4x10	23	30
50MH	6	6.35	7	8	9	9.52	10	11	12	12.7	–	50	65		55	2	5.5	16	23
60A	6	6.35	7	8	9	9.52	10	11	12	12.7	–	60	75		65	3	M5x12	18	25
60A1	6	6.35	7	8	9	9.52	10	11	12	12.7	14	60	75		65	3	M5x12	23	30
60B	6	6.35	7	8	9	9.52	10	11	12	12.7	14	60	85		75	3	M5x12	23	30
60C	6	6.35	7	8	9	9.52	10	11	12	12.7	14	60	90		75	3	M5x12	23	30
70A	6	6.35	7	8	9	9.52	10	11	12	12.7	14	70	85		75	3	M6x15	23	30
70B	6	6.35	7	8	9	9.52	10	11	12	12.7	14	70	90		75	5	M5x12	23	30
73A	6	6.35	7	8	9	9.52	10	11	12	12.7	14	73	98.4		85	3	M5x12	25	32
80A	6	6.35	7	8	9	9.52	10	11	12	12.7	14	80	100		85	3	M6x15	23	30

Please contact us for different motor adapters and input shaft bore.

www.reduktor-mex.ru

TR K 053

FM

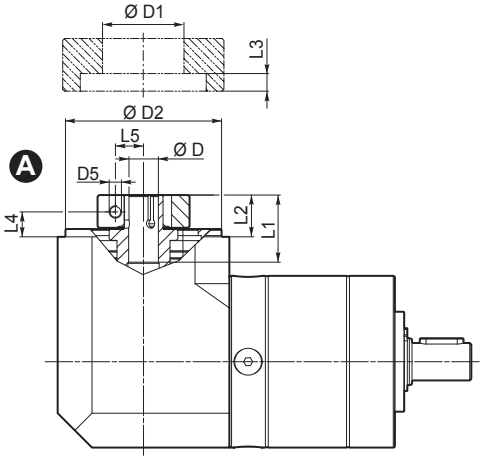

View from A

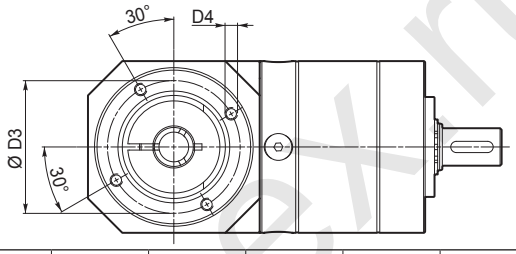

D				D1	D2	D3	D4	D5	L1	L2	L3	L4	L5
6	6.35	7		32.5	50	42.5	M4x8	M4	20.2	13.2	3	8.7	8
8	9	9.52	10	32.5	50	42.5	M4x8	M4	20.2	13.2	3	7.8	9
11	12	12.7		35.5	50	42.5	M4x8	M4	20.5	13.5	3	8.5	11
14				35.5	50	42.5	M4x8	M4	24	17	3	10.2	11.5

i	$M_{n\,2}$ [Nm]	$M_{a\,2}$ [Nm]	$M_{p\,2}$ [Nm]	n_1 [min⁻¹]	$n_{1\,max}$ [min⁻¹]	φ_S [arcmin]	C_t [Nm/arcmin]	$R_{2\,max}$ [N]	$A_{2\,max}$ [N]	η %	J_G [kgcm²] D 6 ... 9.52	J_G [kgcm²] D 10 ... 14
TR K 053 2_3	12	22	40	3300	4000	5'	1.0	500	600	94	0.18	0.20
TR K 053 2_4	15	28	45	3500	5000	5'	1.0	500	600	94	0.18	0.19
TR K 053 2_5	15	28	45	3500	5000	5'	1.0	500	600	94	0.17	0.19
TR K 053 2_6	15	28	45	3500	5000	5'	1.0	500	600	94	0.17	0.18
TR K 053 2_7	15	28	45	4000	6000	5'	1.0	500	600	94	0.17	0.19
TR K 053 2_9	12	22	40	4000	6000	5'	1.0	500	600	94	0.17	0.18
TR K 053 3_12	20	30	60	3300	4000	5'	0.9	500	600	91	0.18	0.20
TR K 053 3_15	20	30	60	3300	4000	5'	0.9	500	600	91	0.18	0.20
TR K 053 3_16	20	30	60	3500	5000	5'	0.9	500	600	91	0.17	0.19
TR K 053 3_20	20	30	60	3500	5000	5'	0.9	500	600	91	0.17	0.19
TR K 053 3_25	20	30	60	3500	5000	5'	0.9	500	600	91	0.17	0.19
TR K 053 3_28	20	30	60	4000	6000	5'	0.9	500	600	91	0.17	0.19
TR K 053 3_35	20	30	60	4000	6000	5'	0.9	500	600	91	0.17	0.19
TR K 053 3_36	15	28	45	4000	6000	5'	0.9	500	600	91	0.17	0.18
TR K 053 3_45	20	30	60	4000	6000	5'	0.9	500	600	91	0.17	0.19
TR K 053 3_81	12	22	40	4000	6000	5'	0.9	500	600	91	0.17	0.18
TR K 053 4_48	20	30	60	4000	5000	7'	0.7	500	600	89	0.18	0.19
TR K 053 4_60	20	30	60	3500	5000	7'	0.7	500	600	89	0.18	0.19
TR K 053 4_64	20	30	60	3500	5000	7'	0.7	500	600	89	0.17	0.19
TR K 053 4_75	20	30	60	3500	5000	7'	0.7	500	600	89	0.17	0.19
TR K 053 4_80	20	30	60	3500	5000	7'	0.7	500	600	89	0.17	0.19
TR K 053 4_84	20	30	60	4000	6000	7'	0.7	500	600	89	0.17	0.19
TR K 053 4_100	20	30	60	3500	5000	7'	0.7	500	600	89	0.17	0.19
TR K 053 4_112	20	30	60	4000	6000	7'	0.7	500	600	89	0.17	0.19
TR K 053 4_125	20	30	60	3500	5000	7'	0.7	500	600	89	0.17	0.19
TR K 053 4_140	20	30	60	4000	6000	7'	0.7	500	600	89	0.17	0.19
TR K 053 4_144	20	30	60	4000	6000	7'	0.7	500	600	89	0.17	0.18
TR K 053 4_175	20	30	60	4000	6000	7'	0.7	500	600	89	0.17	0.19
TR K 053 4_180	20	30	60	4000	6000	7'	0.7	500	600	89	0.17	0.18
TR K 053 4_216	20	30	60	3500	5000	7'	0.7	500	600	89	0.17	0.18
TR K 053 4_225	20	30	60	4000	6000	7'	0.7	500	600	89	0.17	0.18
TR K 053 4_245	20	30	60	4000	6000	7'	0.7	500	600	89	0.17	0.19
TR K 053 4_252	20	30	60	4000	6000	7'	0.7	500	600	89	0.18	0.20
TR K 053 4_324	20	30	60	4000	6000	7'	0.7	500	600	89	0.17	0.18
TR K 053 4_405	20	30	60	4000	6000	7'	0.7	500	600	89	0.17	0.18
TR K 053 4_567	20	30	60	4000	6000	7'	0.7	500	600	89	0.17	0.18
TR K 053 4_729	12	22	40	4000	6000	7'	0.7	500	600	89	0.17	0.18

www.iek-ktor-mex.ru

TR 060

IS

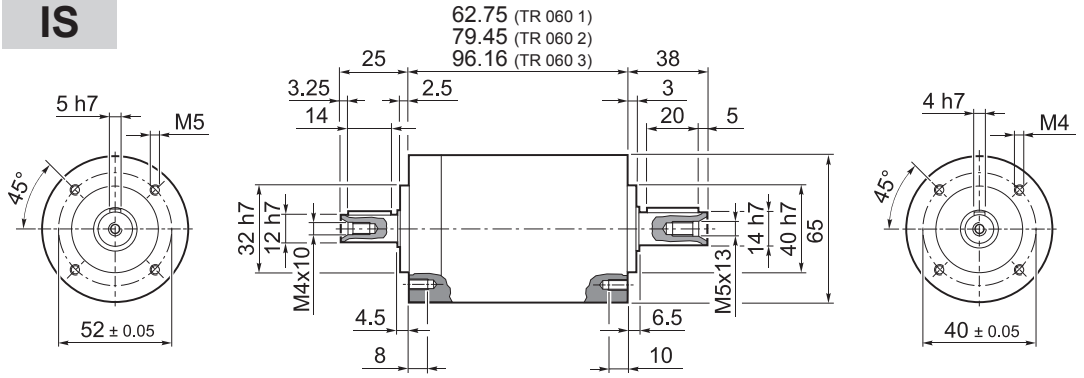

	Kg
TR 060 1	1.2
TR 060 2	1.7
TR 060 3	2.0

25AH ... 80A

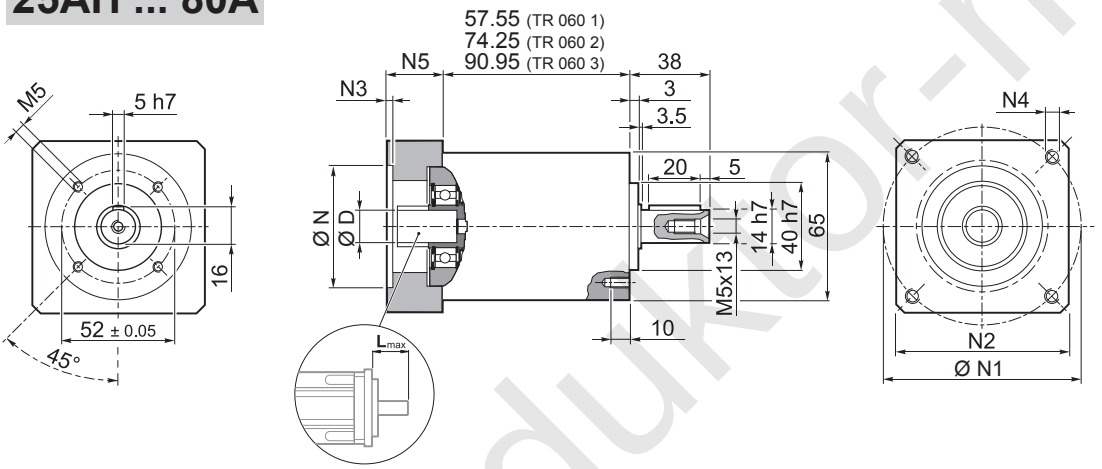

	Kg
TR 060 1	1.2
TR 060 2	1.7
TR 060 3	2.0

	D											N	N1 min	N1 max	N2	N3	N4	N5	L_{max}
25AH	6	6.35	7	8	9	9.52	–	–	–	–	–	25	39	56	65	3.5	4.5	25	25
26AH	6	6.35	7	8	9	9.52	–	–	–	–	–	26	39	56					
28AH	6	6.35	7	8	9	9.52	–	–	–	–	–	28	39	56					
30AH	6	6.35	7	8	9	9.52	–	–	–	–	–	30	39	56					
32AH	6	6.35	7	8	9	9.52	–	–	–	–	–	32	39	56					
34AH	6	6.35	7	8	9	9.52	–	–	–	–	–	34	40	56					
36AH	6	6.35	7	8	9	9.52	–	–	–	–	–	36	42	56					
39AH	6	6.35	7	8	9	9.52	–	–	–	–	–	39	45	56					
40AH	6	6.35	7	8	9	9.52	–	–	–	–	–	40	46	56					
38B	6	6.35	7	8	9	9.52	10	11	12	12.7	–	38.1	66.6		60	3	M4x10	18	25
40B	6	6.35	7	8	9	9.52	10	11	12	12.7	–	40	63		60	3	M4x10	18	25
50A	6	6.35	7	8	9	9.52	10	11	12	12.7	–	50	60		60	3	M4x10	18	25
50B	6	6.35	7	8	9	9.52	10	11	12	12.7	14	50	65		60	3	M5x12	23	30
50BH	6	6.35	7	8	9	9.52	10	11	12	12.7	14	50	65		65	3	5.5	25	32
50C	6	6.35	7	8	9	9.52	10	11	12	12.7	14	50	70		60	3	M4x10	23	30
55MH	6	6.35	7	8	9	9.52	10	11	12	12.7	–	55	80		65	2	5.5	16	23
60A	6	6.35	7	8	9	9.52	10	11	12	12.7	–	60	75		65	3	M5x12	18	25
60AH	6	6.35	7	8	9	9.52	10	11	12	12.7	–	60	75		65	3	5.5	18	25
60A1	6	6.35	7	8	9	9.52	10	11	12	12.7	14	60	75		65	3	M5x12	23	30
60AH1	6	6.35	7	8	9	9.52	10	11	12	12.7	14	60	75		65	3	5.5	23	30
60B	6	6.35	7	8	9	9.52	10	11	12	12.7	14	60	85		75	3	M5x12	23	30
60C	6	6.35	7	8	9	9.52	10	11	12	12.7	14	60	90		75	3	M5x12	23	30
70A	6	6.35	7	8	9	9.52	10	11	12	12.7	14	70	85		75	3	M6x15	23	30
70B	6	6.35	7	8	9	9.52	10	11	12	12.7	14	70	90		75	5	M5x12	23	30
73A	6	6.35	7	8	9	9.52	10	11	12	12.7	14	73	98.4		85	3	M5x12	25	32
80A	6	6.35	7	8	9	9.52	10	11	12	12.7	14	80	100		85	3	M6x15	23	30

Please contact us for different motor adapters and input shaft bore.

www.redukor-mex.ru

TR 060

FM

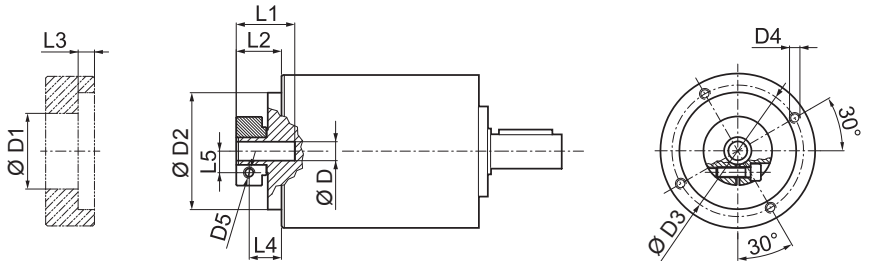

D				D1	D2	D3	D4	D5	L1	L2	L3	L4	L5
6	6.35	7		32.5	50	42.5	M4x8	M4	20.2	13.2	3	8.7	8
8	9	9.52	10	32.5	50	42.5	M4x8	M4	20.2	13.2	3	7.8	9
11	12	12.7		35.5	50	42.5	M4x8	M4	20.5	13.5	3	8.5	11
14				35.5	50	42.5	M4x8	M4	24	17	3	10.2	11.5

i	$M_{n\,2}$ [Nm]	$M_{a\,2}$ [Nm]	$M_{p\,2}$ [Nm]	n_1 [min^{-1}]	$n_{1\,max}$ [min^{-1}]	φ_S [arcmin]	φ_R [arcmin]	C_t [Nm/arcmin]	$R_{1\,max}$ [N]	$R_{2\,max}$ [N]	$A_{2\,max}$ [N]	η %	J_G [kgcm^2] D 6 ... 9.52	J_G [kgcm^2] D 10 ... 14
TR 060 1_3	18	35	70	3300	4000	5'	3'	3.0	200	600	700	97	0.10	0.11
TR 060 1_4	25	40	90	3500	5000	5'	3'	3.0	200	600	700	97	0.06	0.08
TR 060 1_5	25	40	90	3500	5000	5'	3'	3.0	200	600	700	97	0.05	0.07
TR 060 1_6	25	40	90	3500	5000	5'	3'	3.0	200	600	700	97	0.04	0.06
TR 060 1_7	25	40	90	4000	6000	5'	3'	3.0	200	600	700	97	0.04	0.06
TR 060 1_10	18	35	70	4000	6000	5'	3'	3.0	200	600	700	97	0.03	0.05
TR 060 2_9	18	35	70	3300	4000	5'	3'	2.5	200	600	700	94	0.10	0.12
TR 060 2_12	30	45	100	3300	4000	5'	3'	2.5	200	600	700	94	0.10	0.11
TR 060 2_15	30	45	100	3300	4000	5'	3'	2.5	200	600	700	94	0.09	0.11
TR 060 2_16	30	45	100	3500	5000	5'	3'	2.5	200	600	700	94	0.06	0.08
TR 060 2_20	30	45	100	3500	5000	5'	3'	2.5	200	600	700	94	0.05	0.07
TR 060 2_25	30	45	100	3500	5000	5'	3'	2.5	200	600	700	94	0.05	0.06
TR 060 2_28	30	45	100	4000	6000	5'	3'	2.5	200	600	700	94	0.04	0.06
TR 060 2_30	18	35	70	4000	6000	5'	3'	2.5	200	600	700	94	0.03	0.05
TR 060 2_35	30	45	100	4000	6000	5'	3'	2.5	200	600	700	94	0.04	0.06
TR 060 2_36	25	40	90	3500	5000	5'	3'	2.5	200	600	700	94	0.04	0.06
TR 060 2_40	30	45	100	4000	6000	5'	3'	2.5	200	600	700	94	0.03	0.05
TR 060 2_50	30	45	100	4000	6000	5'	3'	2.5	200	600	700	94	0.03	0.05
TR 060 2_70	30	45	100	4000	6000	5'	3'	2.5	200	600	700	94	0.03	0.05
TR 060 2_100	18	35	70	4000	6000	5'	3'	2.5	200	600	700	94	0.03	0.05
TR 060 3_48	30	45	100	3500	5000	7'	5'	2.0	200	600	700	91	0.06	0.08
TR 060 3_64	30	45	100	3500	5000	7'	5'	2.0	200	600	700	91	0.06	0.08
TR 060 3_75	30	45	100	3500	5000	7'	5'	2.0	200	600	700	91	0.05	0.07
TR 060 3_80	30	45	100	3500	5000	7'	5'	2.0	200	600	700	91	0.06	0.08
TR 060 3_84	30	45	100	4000	6000	7'	5'	2.0	200	600	700	91	0.04	0.06
TR 060 3_90	18	35	70	4000	6000	7'	5'	2.0	200	600	700	91	0.03	0.05
TR 060 3_120	30	45	100	4000	6000	7'	5'	2.0	200	600	700	91	0.03	0.05
TR 060 3_125	30	45	100	3500	5000	7'	5'	2.0	200	600	700	91	0.05	0.07
TR 060 3_140	30	45	100	4000	6000	7'	5'	2.0	200	600	700	91	0.04	0.06
TR 060 3_150	30	45	100	4000	6000	7'	5'	2.0	200	600	700	91	0.03	0.05
TR 060 3_160	30	45	100	4000	6000	7'	5'	2.0	200	600	700	91	0.03	0.05
TR 060 3_175	30	45	100	4000	6000	7'	5'	2.0	200	600	700	91	0.04	0.06
TR 060 3_200	30	45	100	4000	6000	7'	5'	2.0	200	600	700	91	0.03	0.05
TR 060 3_210	30	45	100	4000	6000	7'	5'	2.0	200	600	700	91	0.03	0.05
TR 060 3_216	30	45	100	3500	5000	7'	5'	2.0	200	600	700	91	0.04	0.06
TR 060 3_250	30	45	100	4000	6000	7'	5'	2.0	200	600	700	91	0.03	0.05
TR 060 3_280	30	45	100	4000	6000	7'	5'	2.0	200	600	700	91	0.03	0.05
TR 060 3_350	30	45	100	4000	6000	7'	5'	2.0	200	600	700	91	0.03	0.05
TR 060 3_400	30	45	100	4000	6000	7'	5'	2.0	200	600	700	91	0.03	0.05
TR 060 3_500	30	45	100	4000	6000	7'	5'	2.0	200	600	700	91	0.03	0.05
TR 060 3_700	30	45	100	4000	6000	7'	5'	2.0	200	600	700	91	0.03	0.05
TR 060 3_1000	18	35	70	4000	6000	7'	5'	2.0	200	600	700	91	0.03	0.05

www.redukt-mex.ru

TR K 060

25AH ... 80A

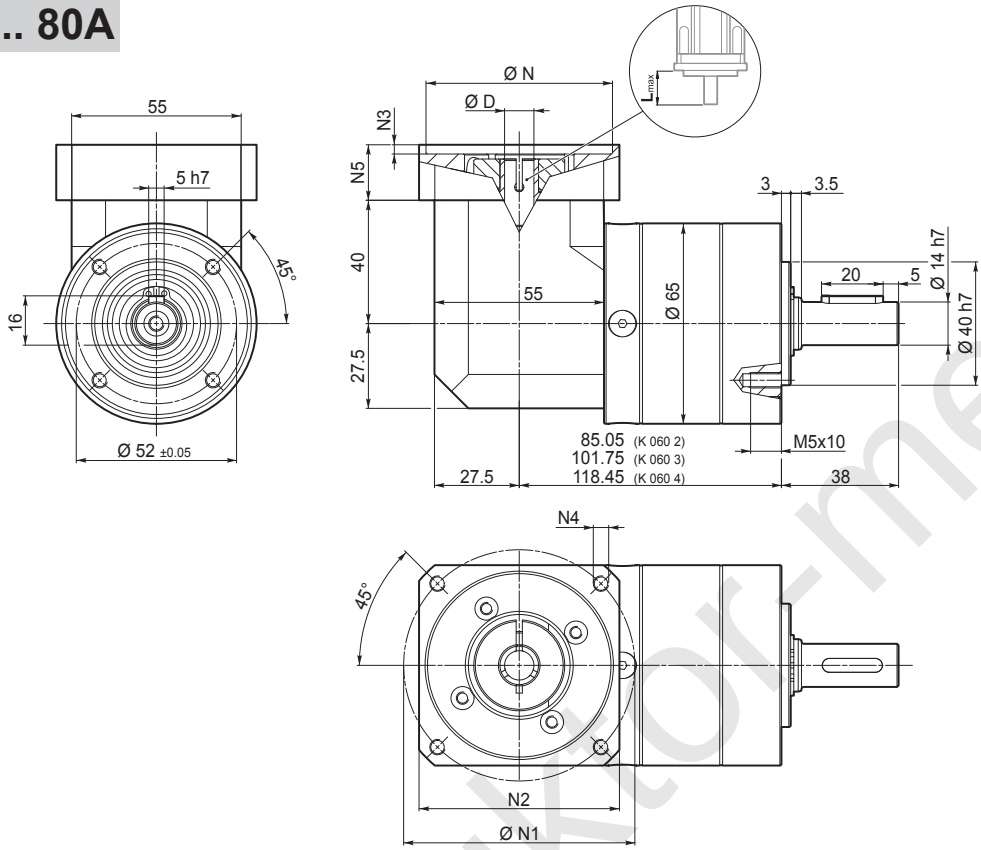

	Kg
TR K 060 2	1.7
TR K 060 3	2.2
TR K 060 4	2.5

	D											N	N1 min	N1 max	N2	N3	N4	N5	L_{max}
25AH	6	6.35	7	8	9	9.52	–	–	–	–	–	25	39	56	65	3.5	4.5	25	25
26AH	6	6.35	7	8	9	9.52	–	–	–	–	–	26	39	56					
28AH	6	6.35	7	8	9	9.52	–	–	–	–	–	28	39	56					
30AH	6	6.35	7	8	9	9.52	–	–	–	–	–	30	39	56					
32AH	6	6.35	7	8	9	9.52	–	–	–	–	–	32	39	56					
34AH	6	6.35	7	8	9	9.52	–	–	–	–	–	34	40	56					
36AH	6	6.35	7	8	9	9.52	–	–	–	–	–	36	42	56					
39AH	6	6.35	7	8	9	9.52	–	–	–	–	–	39	45	56					
40AH	6	6.35	7	8	9	9.52	–	–	–	–	–	40	46	56					
38B	6	6.35	7	8	9	9.52	10	11	12	12.7	–	38.1	66.6		60	3	M4x10	18	25
40B	6	6.35	7	8	9	9.52	10	11	12	12.7	–	40	63		60	3	M4x10	18	25
50A	6	6.35	7	8	9	9.52	10	11	12	12.7	–	50	60		60	3	M4x10	18	25
50B	6	6.35	7	8	9	9.52	10	11	12	12.7	14	50	65		60	3	M5x12	23	30
50BH	6	6.35	7	8	9	9.52	10	11	12	12.7	14	50	65		65	3	5.5	25	32
50C	6	6.35	7	8	9	9.52	10	11	12	12.7	14	50	70		60	3	M4x10	23	30
55MH	6	6.35	7	8	9	9.52	10	11	12	12.7	–	55	80		65	2	5.5	16	23
60A	6	6.35	7	8	9	9.52	10	11	12	12.7	–	60	75		65	3	M5x12	18	25
60A1	6	6.35	7	8	9	9.52	10	11	12	12.7	14	60	75		65	3	M5x12	23	30
60B	6	6.35	7	8	9	9.52	10	11	12	12.7	14	60	85		75	3	M5x12	23	30
60C	6	6.35	7	8	9	9.52	10	11	12	12.7	14	60	90		75	3	M5x12	23	30
70A	6	6.35	7	8	9	9.52	10	11	12	12.7	14	70	85		75	3	M6x15	23	30
70B	6	6.35	7	8	9	9.52	10	11	12	12.7	14	70	90		75	5	M5x12	23	30
73A	6	6.35	7	8	9	9.52	10	11	12	12.7	14	73	98.4		85	3	M5x12	25	32
80A	6	6.35	7	8	9	9.52	10	11	12	12.7	14	80	100		85	3	M6x15	23	30

Please contact us for different motor adapters and input shaft bore.

www.redukTor-mex.ru

TR K 060

FM

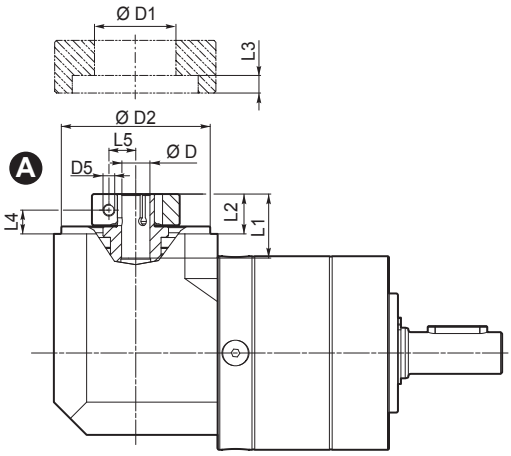

View from A

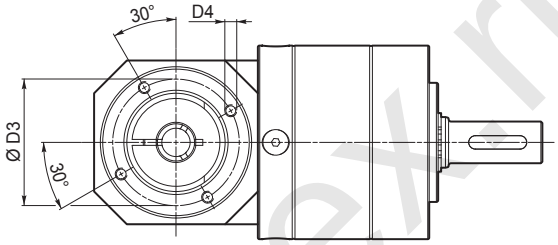

D				D1	D2	D3	D4	D5	L1	L2	L3	L4	L5
6	6.35	7		32.5	50	42.5	M4x8	M4	20.2	13.2	3	8.7	8
8	9	9.52	10	32.5	50	42.5	M4x8	M4	20.2	13.2	3	7.8	9
11	12	12.7		35.5	50	42.5	M4x8	M4	20.5	13.5	3	8.5	11
14				35.5	50	42.5	M4x8	M4	24	17	3	10.2	11.5

i	$M_{n\,2}$ [Nm]	$M_{a\,2}$ [Nm]	$M_{p\,2}$ [Nm]	n_1 [min⁻¹]	$n_{1\,max}$ [min⁻¹]	φ_S [arcmin]	φ_R [arcmin]	C_t [Nm/arcmin]	$R_{2\,max}$ [N]	$A_{2\,max}$ [N]	η %	J_G [kgcm²] D 6 ... 9.52	J_G [kgcm²] D 10 ... 14
TR K 060 2_3	18	35	70	3300	4000	5'	3'	3.0	600	700	94	0.20	0.20
TR K 060 2_4	25	40	90	3500	5000	5'	3'	3.0	600	700	94	0.18	0.20
TR K 060 2_5	25	40	90	3500	5000	5'	3'	3.0	600	700	94	0.17	0.19
TR K 060 2_6	25	40	90	3500	5000	5'	3'	3.0	600	700	94	0.17	0.19
TR K 060 2_7	25	40	90	4000	6000	5'	3'	3.0	600	700	94	0.17	0.19
TR K 060 2_10	18	35	70	4000	6000	5'	3'	3.0	600	700	94	0.17	0.18
TR K 060 3_9	18	35	70	3300	4000	5'	3'	2.5	600	700	91	0.20	0.21
TR K 060 3_12	30	45	100	3300	4000	5'	3'	2.5	600	700	91	0.20	0.21
TR K 060 3_15	30	45	100	3300	4000	5'	3'	2.5	600	700	91	0.19	0.21
TR K 060 3_16	30	45	100	3500	5000	5'	3'	2.5	600	700	91	0.18	0.20
TR K 060 3_20	30	45	100	3500	5000	5'	3'	2.5	600	700	91	0.17	0.19
TR K 060 3_25	30	45	100	3500	5000	5'	3'	2.5	600	700	91	0.17	0.18
TR K 060 3_28	30	45	100	4000	6000	5'	3'	2.5	600	700	91	0.17	0.19
TR K 060 3_30	18	35	70	4000	6000	5'	3'	2.5	600	700	91	0.17	0.18
TR K 060 3_35	30	45	100	4000	6000	5'	3'	2.5	600	700	91	0.18	0.19
TR K 060 3_36	25	40	90	3500	5000	5'	3'	2.5	600	700	91	0.18	0.19
TR K 060 3_40	30	45	100	4000	6000	5'	3'	2.5	600	700	91	0.17	0.18
TR K 060 3_50	30	45	100	4000	6000	5'	3'	2.5	600	700	91	0.17	0.18
TR K 060 3_70	30	45	100	4000	6000	5'	3'	2.5	600	700	91	0.17	0.18
TR K 060 3_100	18	35	70	4000	6000	5'	3'	2.5	600	700	91	0.17	0.18
TR K 060 4_48	30	45	100	3500	5000	7'	5'	2.0	600	700	89	0.18	0.20
TR K 060 4_64	30	45	100	3500	5000	7'	5'	2.0	600	700	89	0.18	0.20
TR K 060 4_75	30	45	100	3500	5000	7'	5'	2.0	600	700	89	0.17	0.19
TR K 060 4_80	30	45	100	3500	5000	7'	5'	2.0	600	700	89	0.18	0.20
TR K 060 4_84	30	45	100	4000	6000	7'	5'	2.0	600	700	89	0.17	0.19
TR K 060 4_90	18	35	70	4000	6000	7'	5'	2.0	600	700	89	0.17	0.18
TR K 060 4_120	30	45	100	4000	6000	7'	5'	2.0	600	700	89	0.15	0.17
TR K 060 4_125	30	45	100	3500	5000	7'	5'	2.0	600	700	89	0.17	0.19
TR K 060 4_140	30	45	100	4000	6000	7'	5'	2.0	600	700	89	0.17	0.19
TR K 060 4_150	30	45	100	4000	6000	7'	5'	2.0	600	700	89	0.17	0.18
TR K 060 4_160	30	45	100	4000	6000	7'	5'	2.0	600	700	89	0.17	0.18
TR K 060 4_175	30	45	100	4000	6000	7'	5'	2.0	600	700	89	0.17	0.19
TR K 060 4_200	30	45	100	4000	6000	7'	5'	2.0	600	700	89	0.17	0.18
TR K 060 4_210	30	45	100	4000	6000	7'	5'	2.0	600	700	89	0.17	0.18
TR K 060 4_216	30	45	100	3500	5000	7'	5'	2.0	600	700	89	0.17	0.19
TR K 060 4_250	30	45	100	4000	6000	7'	5'	2.0	600	700	89	0.17	0.18
TR K 060 4_280	30	45	100	4000	6000	7'	5'	2.0	600	700	89	0.17	0.18
TR K 060 4_350	30	45	100	4000	6000	7'	5'	2.0	600	700	89	0.17	0.18
TR K 060 4_400	30	45	100	4000	6000	7'	5'	2.0	600	700	89	0.17	0.18
TR K 060 4_500	30	45	100	4000	6000	7'	5'	2.0	600	700	89	0.17	0.18
TR K 060 4_700	30	45	100	4000	6000	7'	5'	2.0	600	700	89	0.17	0.18
TR K 060 4_1000	18	35	70	4000	6000	7'	5'	2.0	600	700	89	0.17	0.18

TR

www.technikor-mex.ru

TR 080

IS

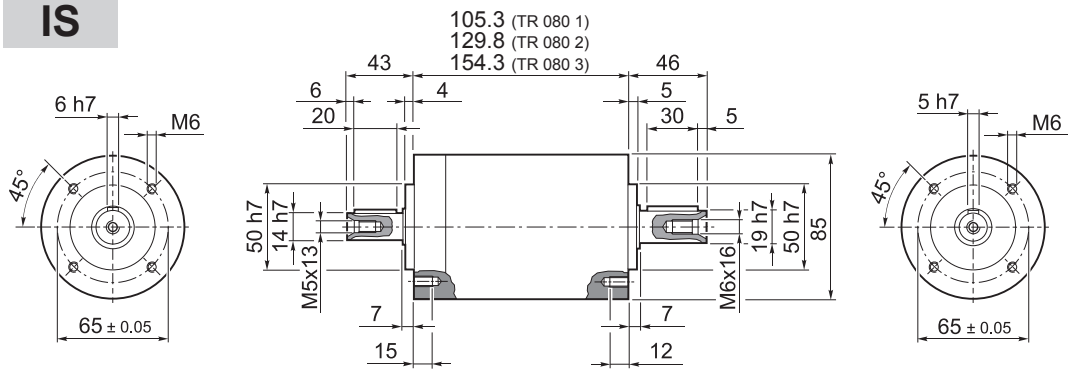

	Kg
TR 080 1	4.0
TR 080 2	4.6
TR 080 3	5.2

TR

40B1 ... 110B1

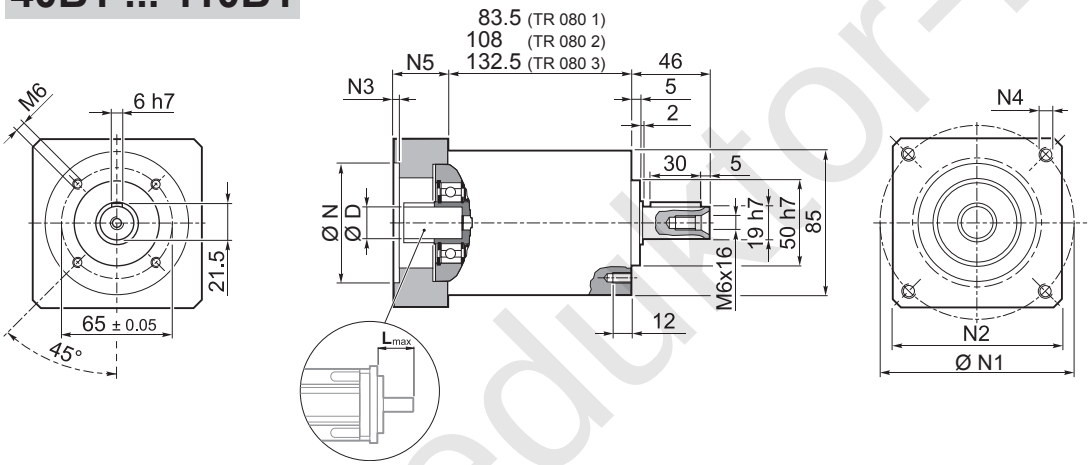

	Kg
TR 080 1	4.0
TR 080 2	4.6
TR 080 3	5.2

	D												N	N1	N2	N3	N4	N5	L_{max}
40B1	8	9	9.52	11	12	12.7	14	–	–	–	–	–	40	63	80	4	M4x12	34	40
45A	8	9	9.52	11	12	12.7	–	–	–	–	–	–	45	63	80	4	M4x12	34	40
50B1	8	9	9.52	11	12	12.7	14	–	–	–	–	–	50	65	80	4	M5x16	34	40
50BH1	8	9	9.52	11	12	12.7	14	–	–	–	–	–	50	65	80	4	5.5	34	40
50C1	8	9	9.52	11	12	12.7	14	–	–	–	–	–	50	70	80	4	M4x10	34	40
50D	8	9	9.52	11	12	12.7	14	–	–	–	–	–	50	95	80	4	M6x20	34	40
55A	8	9	9.52	11	12	12.7	14	15.875	16	17	19	19.05	55.5	125.7	105	4	M6x20	34	40
60A2	8	9	9.52	11	12	12.7	14	–	–	–	–	–	60	75	80	4	M5x16	34	40
60AH2	8	9	9.52	11	12	12.7	14	–	–	–	–	–	60	75	90	4	6.5	34	40
60B1	8	9	9.52	11	12	12.7	14	15.875	16	–	–	–	60	85	80	4	M5x16	34	40
60C1	8	9	9.52	11	12	12.7	14	15.875	16	–	–	–	60	90	80	4	M5x16	34	40
70A1	8	9	9.52	11	12	12.7	14	15.875	16	17	19	19.05	70	85	80	4	M6x20	34	40
70AH1	8	9	9.52	11	12	12.7	14	15.875	16	17	19	19.05	70	85	90	4	6.5	34	40
70B1	8	9	9.52	11	12	12.7	14	15.875	16	17	19	19.05	70	90	80	4	M5x16	34	40
73A1	8	9	9.52	11	12	12.7	14	–	–	–	–	–	73	98.4	85	4	M5x16	34	40
80A1	8	9	9.52	11	12	12.7	14	15.875	16	17	19	19.05	80	100	90	4	M6x16	34	40
95A	8	9	9.52	11	12	12.7	14	15.875	16	17	19	19.05	95	115	100	4	M8x20	34	40
95B	8	9	9.52	11	12	12.7	14	15.875	16	17	19	19.05	95	130	115	4	M8x20	34	40
110A	8	9	9.52	11	12	12.7	14	15.875	16	17	19	19.05	110	130	115	4	M8x20	34	40
110B	8	9	9.52	11	12	12.7	14	15.875	16	17	19	19.05	110	145	120	6.5	M8x20	44	50
110B1	8	9	9.52	11	12	12.7	14	15.875	16	17	19	19.05	110	145	120	6.5	M8x20	54	60

Please contact us for different motor adapters and input shaft bore.

www.reductor-mex.ru

TR 080

FM

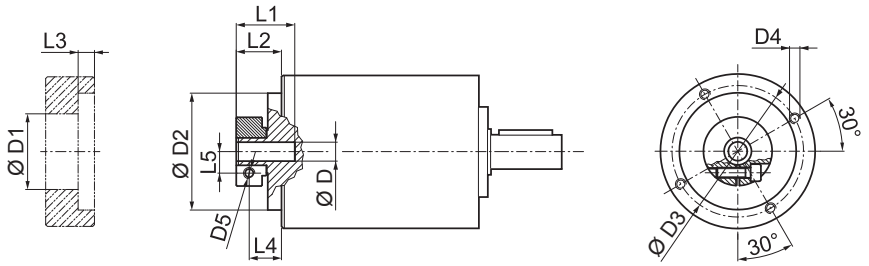

D				D1	D2	D3	D4	D5	L1	L2	L3	L4	L5
8	9	9.52		38	68	76.5	M6x12	M6	32.2	26.3	9.5	19.3	10.5
11	12	12.7		43	68	76.5	M6x12	M6	32.2	26.3	9.5	19.3	12.5
14	15.875	16	17	48	68	76.5	M6x12	M6	32.2	26.3	9.5	19.3	14.5
19	19.05			51	68	76.5	M6x12	M6	32.2	26.3	9.5	19.3	16.5

i	$M_{n\,2}$ [Nm]	$M_{a\,2}$ [Nm]	$M_{p\,2}$ [Nm]	n_1 [min⁻¹]	$n_{1\,max}$ [min⁻¹]	φ_S [arcmin]	φ_R [arcmin]	C_t [Nm/arcmin]	$R_{1\,max}$ [N]	$R_{2\,max}$ [N]	$A_{2\,max}$ [N]	η %	J_G [kgcm²] D 8 ... 12.7	J_G [kgcm²] D 14 ... 19.05
TR 080 1_3	40	80	180	2900	3500	5'	3'	8.0	400	2500	3000	97	0.50	0.59
TR 080 1_4	50	80	200	3100	4500	5'	3'	8.0	400	2500	3000	97	0.34	0.43
TR 080 1_5	50	80	200	3200	4500	5'	3'	8.0	400	2500	3000	97	0.28	0.37
TR 080 1_6	50	80	200	3200	4500	5'	3'	8.0	400	2500	3000	97	0.21	0.30
TR 080 1_7	50	80	200	4000	6000	5'	3'	8.0	400	2500	3000	97	0.23	0.32
TR 080 1_10	40	80	180	4000	6000	5'	3'	8.0	400	2500	3000	97	0.20	0.29
TR 080 2_9	40	80	180	2900	3500	5'	3'	6.5	400	2500	3000	94	0.49	0.58
TR 080 2_12	70	100	250	2900	3500	5'	3'	6.5	400	2500	3000	94	0.47	0.56
TR 080 2_15	70	100	250	2900	3500	5'	3'	6.5	400	2500	3000	94	0.46	0.55
TR 080 2_16	70	100	250	3100	4500	5'	3'	6.5	400	2500	3000	94	0.32	0.41
TR 080 2_20	70	100	250	3200	4500	5'	3'	6.5	400	2500	3000	94	0.27	0.36
TR 080 2_25	70	100	250	3200	4500	5'	3'	6.5	400	2500	3000	94	0.27	0.36
TR 080 2_28	70	100	250	4000	6000	5'	3'	6.5	400	2500	3000	94	0.22	0.31
TR 080 2_30	40	80	180	4000	6000	5'	3'	6.5	400	2500	3000	94	0.20	0.29
TR 080 2_35	70	100	250	4000	6000	5'	3'	6.5	400	2500	3000	94	0.22	0.31
TR 080 2_36	50	80	200	3200	4500	5'	3'	6.5	400	2500	3000	94	0.20	0.29
TR 080 2_40	70	100	250	4000	6000	5'	3'	6.5	400	2500	3000	94	0.20	0.29
TR 080 2_50	70	100	250	4000	6000	5'	3'	6.5	400	2500	3000	94	0.19	0.28
TR 080 2_70	70	100	250	4000	6000	5'	3'	6.5	400	2500	3000	94	0.19	0.28
TR 080 2_100	40	80	180	4000	6000	5'	3'	6.5	400	2500	3000	94	0.19	0.28
TR 080 3_48	70	100	250	3100	4500	7'	5'	5.5	400	2500	3000	91	0.33	0.42
TR 080 3_64	70	100	250	3100	4500	7'	5'	5.5	400	2500	3000	91	0.32	0.41
TR 080 3_75	70	100	250	3200	4500	7'	5'	5.5	400	2500	3000	91	0.27	0.36
TR 080 3_80	70	100	250	3100	4500	7'	5'	5.5	400	2500	3000	91	0.32	0.41
TR 080 3_84	70	100	250	4000	6000	7'	5'	5.5	400	2500	3000	91	0.23	0.32
TR 080 3_90	40	80	180	4000	6000	7'	5'	5.5	400	2500	3000	91	0.20	0.29
TR 080 3_120	70	100	250	4000	6000	7'	5'	5.5	400	2500	3000	91	0.20	0.29
TR 080 3_125	70	100	250	3200	4500	7'	5'	5.5	400	2500	3000	91	0.27	0.36
TR 080 3_140	70	100	250	4000	6000	7'	5'	5.5	400	2500	3000	91	0.22	0.31
TR 080 3_150	70	100	250	4000	6000	7'	5'	5.5	400	2500	3000	91	0.20	0.29
TR 080 3_160	70	100	250	4000	6000	7'	5'	5.5	400	2500	3000	91	0.20	0.29
TR 080 3_175	70	100	250	4000	6000	7'	5'	5.5	400	2500	3000	91	0.22	0.31
TR 080 3_200	70	100	250	4000	6000	7'	5'	5.5	400	2500	3000	91	0.20	0.29
TR 080 3_210	70	100	250	4000	6000	7'	5'	5.5	400	2500	3000	91	0.20	0.29
TR 080 3_216	70	100	250	3200	4500	7'	5'	5.5	400	2500	3000	91	0.20	0.29
TR 080 3_250	70	100	250	4000	6000	7'	5'	5.5	400	2500	3000	91	0.19	0.28
TR 080 3_280	70	100	250	4000	6000	7'	5'	5.5	400	2500	3000	91	0.19	0.28
TR 080 3_350	70	100	250	4000	6000	7'	5'	5.5	400	2500	3000	91	0.19	0.28
TR 080 3_400	70	100	250	4000	6000	7'	5'	5.5	400	2500	3000	91	0.19	0.28
TR 080 3_500	70	100	250	4000	6000	7'	5'	5.5	400	2500	3000	91	0.19	0.28
TR 080 3_700	70	100	250	4000	6000	7'	5'	5.5	400	2500	3000	91	0.19	0.28
TR 080 3_1000	40	80	180	4000	6000	7'	5'	5.5	400	2500	3000	91	0.19	0.28

www.technikon-mex.ru

TR G 080

40B1 ... 110B1

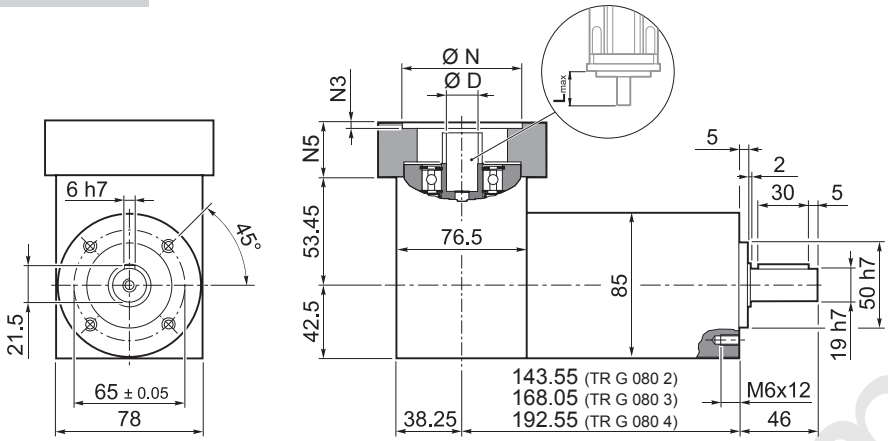

	Kg
TR G 080 2	5.2
TR G 080 3	5.8
TR G 080 4	6.4

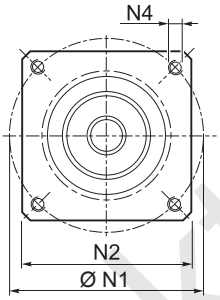

	D												N	N1	N2	N3	N4	N5	L_{max}
40B1	8	9	9.52	11	12	12.7	14	–	–	–	–	–	40	63	80	4	M4x12	34	40
45A	8	9	9.52	11	12	12.7	–	–	–	–	–	–	45	63	80	4	M4x12	34	40
50B1	8	9	9.52	11	12	12.7	14	–	–	–	–	–	50	65	80	4	M5x16	34	40
50BH1	8	9	9.52	11	12	12.7	14	–	–	–	–	–	50	65	80	4	5.5	34	40
50C1	8	9	9.52	11	12	12.7	14	–	–	–	–	–	50	70	80	4	M4x10	34	40
50D	8	9	9.52	11	12	12.7	14	–	–	–	–	–	50	95	80	4	M6x20	34	40
55A	8	9	9.52	11	12	12.7	14	15.875	16	17	19	19.05	55.5	125.7	105	4	M6x20	34	40
60A2	8	9	9.52	11	12	12.7	14	–	–	–	–	–	60	75	80	4	M5x16	34	40
60AH2	8	9	9.52	11	12	12.7	14	–	–	–	–	–	60	75	90	4	6.5	34	40
60B1	8	9	9.52	11	12	12.7	14	15.875	16	–	–	–	60	85	80	4	M5x16	34	40
60C1	8	9	9.52	11	12	12.7	14	15.875	16	–	–	–	60	90	80	4	M5x16	34	40
70A1	8	9	9.52	11	12	12.7	14	15.875	16	17	19	19.05	70	85	80	4	M6x20	34	40
70AH1	8	9	9.52	11	12	12.7	14	15.875	16	17	19	19.05	70	85	90	4	6.5	34	40
70B1	8	9	9.52	11	12	12.7	14	15.875	16	17	19	19.05	70	90	80	4	M5x16	34	40
73A1	8	9	9.52	11	12	12.7	14	–	–	–	–	–	73	98.4	85	4	M5x16	34	40
80A1	8	9	9.52	11	12	12.7	14	15.875	16	17	19	19.05	80	100	90	4	M6x16	34	40
95A	8	9	9.52	11	12	12.7	14	15.875	16	17	19	19.05	95	115	100	4	M8x20	34	40
95B	8	9	9.52	11	12	12.7	14	15.875	16	17	19	19.05	95	130	115	4	M8x20	34	40
110A	8	9	9.52	11	12	12.7	14	15.875	16	17	19	19.05	110	130	115	4	M8x20	34	40
110B	8	9	9.52	11	12	12.7	14	15.875	16	17	19	19.05	110	145	120	6.5	M8x20	44	50
110B1	8	9	9.52	11	12	12.7	14	15.875	16	17	19	19.05	110	145	120	6.5	M8x20	54	60

Please contact us for different motor adapters and input shaft bore.

www.reduktor-mex.ru

TR G 080

FM

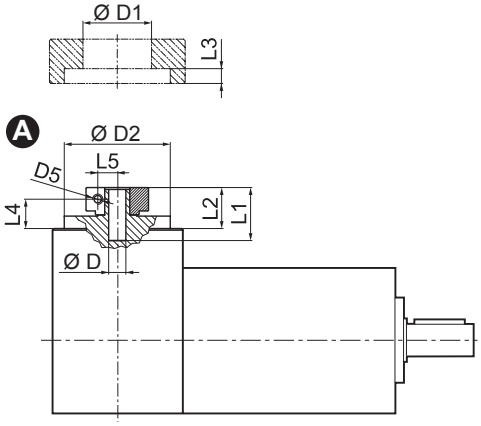

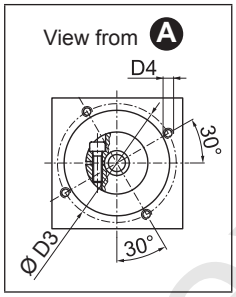

D				D1	D2	D3	D4	D5	L1	L2	L3	L4	L5
8	9	9.52		38	68	76.5	M6x12	M6	32.2	26.3	9.5	19.3	10.5
11	12	12.7		43	68	76.5	M6x12	M6	32.2	26.3	9.5	19.3	12.5
14	15.875	16	17	48	68	76.5	M6x12	M6	32.2	26.3	9.5	19.3	14.5
19	19.05			51	68	76.5	M6x12	M6	32.2	26.3	9.5	19.3	16.5

i	$M_{n\,2}$ [Nm]	$M_{a\,2}$ [Nm]	$M_{p\,2}$ [Nm]	n_1 [min⁻¹]	$n_{1\,max}$ [min⁻¹]	φ_S [arcmin]	φ_R [arcmin]	C_t [Nm/arcmin]	$R_{2\,max}$ [N]	$A_{2\,max}$ [N]	η %	J_G [kgcm²] D 8 ... 12.7	J_G [kgcm²] D 14 ... 19.05
TR G 080 2_3	40	80	180	2900	3500	5'	3'	8.0	2500	3000	94	0.67	0.79
TR G 080 2_4	50	80	200	3100	4500	5'	3'	8.0	2500	3000	94	0.62	0.75
TR G 080 2_5	50	80	200	3200	4500	5'	3'	8.0	2500	3000	94	0.61	0.74
TR G 080 2_6	50	80	200	3200	4500	5'	3'	8.0	2500	3000	94	0.58	0.71
TR G 080 2_7	50	80	200	4000	6000	5'	3'	8.0	2500	3000	94	0.60	0.73
TR G 080 2_10	40	80	180	4000	6000	5'	3'	8.0	2500	3000	94	0.60	0.72
TR G 080 3_9	40	80	180	2900	3500	5'	3'	6.5	2500	3000	91	0.66	0.78
TR G 080 3_12	70	100	250	2900	3500	5'	3'	6.5	2500	3000	91	0.75	0.87
TR G 080 3_15	70	100	250	2900	3500	5'	3'	6.5	2500	3000	91	0.74	0.87
TR G 080 3_16	70	100	250	3100	4500	5'	3'	6.5	2500	3000	91	0.60	0.73
TR G 080 3_20	70	100	250	3200	4500	5'	3'	6.5	2500	3000	91	0.60	0.73
TR G 080 3_25	70	100	250	3200	4500	5'	3'	6.5	2500	3000	91	0.64	0.76
TR G 080 3_28	70	100	250	4000	6000	5'	3'	6.5	2500	3000	91	0.59	0.72
TR G 080 3_30	40	80	180	4000	6000	5'	3'	6.5	2500	3000	91	0.60	0.72
TR G 080 3_35	70	100	250	4000	6000	5'	3'	6.5	2500	3000	91	0.61	0.74
TR G 080 3_36	50	80	200	3200	4500	5'	3'	6.5	2500	3000	91	0.57	0.70
TR G 080 3_40	70	100	250	4000	6000	5'	3'	6.5	2500	3000	91	0.60	0.72
TR G 080 3_50	70	100	250	4000	6000	5'	3'	6.5	2500	3000	91	0.59	0.71
TR G 080 3_70	70	100	250	4000	6000	5'	3'	6.5	2500	3000	91	0.59	0.71
TR G 080 3_100	40	80	180	4000	6000	5'	3'	6.5	2500	3000	91	0.59	0.71
TR G 080 4_48	70	100	250	3100	4500	7'	5'	5.5	2500	3000	89	0.61	0.75
TR G 080 4_64	70	100	250	3100	4500	7'	5'	5.5	2500	3000	89	0.60	0.73
TR G 080 4_75	70	100	250	3200	4500	7'	5'	5.5	2500	3000	89	0.60	0.73
TR G 080 4_80	70	100	250	3100	4500	7'	5'	5.5	2500	3000	89	0.60	0.73
TR G 080 4_84	70	100	250	4000	6000	7'	5'	5.5	2500	3000	89	0.60	0.73
TR G 080 4_90	40	80	180	4000	6000	7'	5'	5.5	2500	3000	89	0.60	0.72
TR G 080 4_120	70	100	250	4000	6000	7'	5'	5.5	2500	3000	89	0.60	0.72
TR G 080 4_125	70	100	250	3200	4500	7'	5'	5.5	2500	3000	89	0.60	0.73
TR G 080 4_140	70	100	250	4000	6000	7'	5'	5.5	2500	3000	89	0.59	0.72
TR G 080 4_150	70	100	250	4000	6000	7'	5'	5.5	2500	3000	89	0.60	0.72
TR G 080 4_160	70	100	250	4000	6000	7'	5'	5.5	2500	3000	89	0.60	0.72
TR G 080 4_175	70	100	250	4000	6000	7'	5'	5.5	2500	3000	89	0.59	0.72
TR G 080 4_200	70	100	250	4000	6000	7'	5'	5.5	2500	3000	89	0.60	0.72
TR G 080 4_210	70	100	250	4000	6000	7'	5'	5.5	2500	3000	89	0.60	0.72
TR G 080 4_216	70	100	250	3200	4500	7'	5'	5.5	2500	3000	89	0.57	0.70
TR G 080 4_250	70	100	250	4000	6000	7'	5'	5.5	2500	3000	89	0.59	0.71
TR G 080 4_280	70	100	250	4000	6000	7'	5'	5.5	2500	3000	89	0.59	0.71
TR G 080 4_350	70	100	250	4000	6000	7'	5'	5.5	2500	3000	89	0.59	0.71
TR G 080 4_400	70	100	250	4000	6000	7'	5'	5.5	2500	3000	89	0.59	0.71
TR G 080 4_500	70	100	250	4000	6000	7'	5'	5.5	2500	3000	89	0.59	0.71
TR G 080 4_700	70	100	250	4000	6000	7'	5'	5.5	2500	3000	89	0.59	0.71
TR G 080 4_1000	40	80	180	4000	6000	7'	5'	5.5	2500	3000	89	0.59	0.71

TR

www.redukto-nex.ru

TR MB 080

40B1 ... 110B1

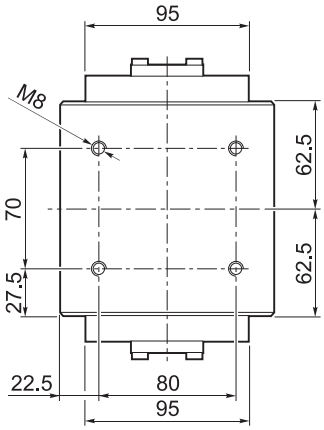

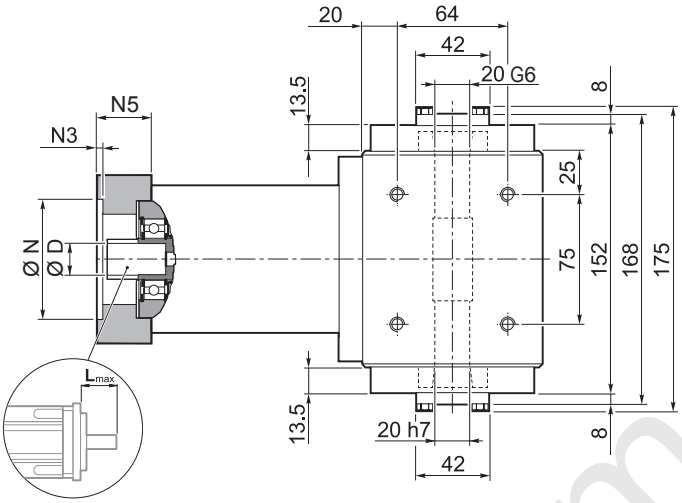

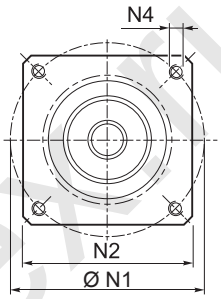

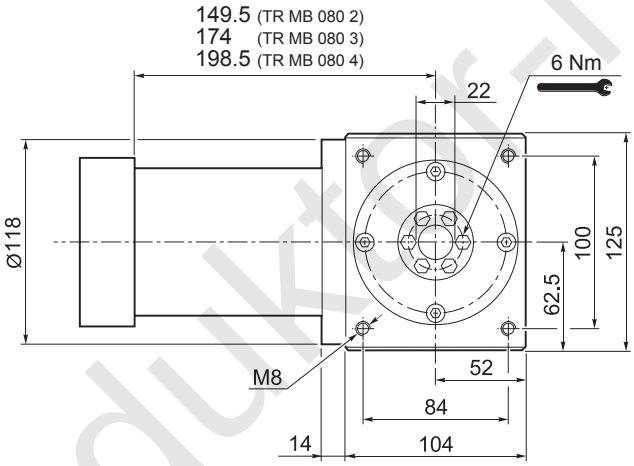

	Kg
TR MB 080 2	14.0
TR MB 080 3	15.0
TR MB 080 4	16.0

	D												N	N1	N2	N3	N4	N5	L_{max}
40B1	8	9	9.52	11	12	12.7	14	–	–	–	–	–	40	63	80	4	M4x12	34	40
45A	8	9	9.52	11	12	12.7	–	–	–	–	–	–	45	63	80	4	M4x12	34	40
50B1	8	9	9.52	11	12	12.7	14	–	–	–	–	–	50	65	80	4	M5x16	34	40
50BH1	8	9	9.52	11	12	12.7	14	–	–	–	–	–	50	65	80	4	5.5	34	40
50C1	8	9	9.52	11	12	12.7	14	–	–	–	–	–	50	70	80	4	M4x10	34	40
50D	8	9	9.52	11	12	12.7	14	–	–	–	–	–	50	95	80	4	M6x20	34	40
55A	8	9	9.52	11	12	12.7	14	15.875	16	17	19	19.05	55.5	125.7	105	4	M6x20	34	40
60A2	8	9	9.52	11	12	12.7	14	–	–	–	–	–	60	75	80	4	M5x16	34	40
60AH2	8	9	9.52	11	12	12.7	14	–	–	–	–	–	60	75	90	4	6.5	34	40
60B1	8	9	9.52	11	12	12.7	14	15.875	16	–	–	–	60	85	80	4	M5x16	34	40
60C1	8	9	9.52	11	12	12.7	14	15.875	16	–	–	–	60	90	80	4	M5x16	34	40
70A1	8	9	9.52	11	12	12.7	14	15.875	16	17	19	19.05	70	85	80	4	M6x20	34	40
70AH1	8	9	9.52	11	12	12.7	14	15.875	16	17	19	19.05	70	85	90	4	6.5	34	40
70B1	8	9	9.52	11	12	12.7	14	15.875	16	17	19	19.05	70	90	80	4	M5x16	34	40
73A1	8	9	9.52	11	12	12.7	14	–	–	–	–	–	73	98.4	85	4	M5x16	34	40
80A1	8	9	9.52	11	12	12.7	14	15.875	16	17	19	19.05	80	100	90	4	M6x16	34	40
95A	8	9	9.52	11	12	12.7	14	15.875	16	17	19	19.05	95	115	100	4	M8x20	34	40
95B	8	9	9.52	11	12	12.7	14	15.875	16	17	19	19.05	95	130	115	4	M8x20	34	40
110A	8	9	9.52	11	12	12.7	14	15.875	16	17	19	19.05	110	130	115	4	M8x20	34	40
110B	8	9	9.52	11	12	12.7	14	15.875	16	17	19	19.05	110	145	120	6.5	M8x20	44	50
110B1	8	9	9.52	11	12	12.7	14	15.875	16	17	19	19.05	110	145	120	6.5	M8x20	54	60

Please contact us for different motor adapters and input shaft bore.

www.reduktor-mexu

TR MB 080

FM

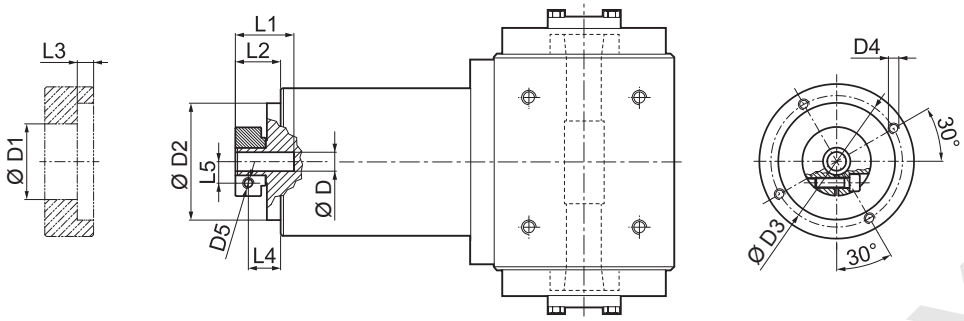

D				D1	D2	D3	D4	D5	L1	L2	L3	L4	L5
8	9	9.52		38	68	76.5	M6x12	M6	32.2	26.3	9.5	19.3	10.5
11	12	12.7		43	68	76.5	M6x12	M6	32.2	26.3	9.5	19.3	12.5
14	15.875	16	17	48	68	76.5	M6x12	M6	32.2	26.3	9.5	19.3	14.5
19	19.05			51	68	76.5	M6x12	M6	32.2	26.3	9.5	19.3	16.5

i	$M_{n\,2}$ [Nm]	$M_{a\,2}$ [Nm]	$M_{p\,2}$ [Nm]	n_1 [min⁻¹]	$n_{1\,max}$ [min⁻¹]	φ_S [arcmin]	φ_R [arcmin]	C_t [Nm/arcmin]	η %	J_G [kgcm²] D 8 ... 12.7	J_G [kgcm²] D 14 ... 19.05
TR MB 080 2_3	40	80	180	2900	3500	5'	3'	8.0	94	0.50	0.59
TR MB 080 2_4	50	80	200	3100	4500	5'	3'	8.0	94	0.34	0.43
TR MB 080 2_5	50	80	200	3200	4500	5'	3'	8.0	94	0.28	0.37
TR MB 080 2_6	50	80	200	3200	4500	5'	3'	8.0	94	0.21	0.30
TR MB 080 2_7	50	80	200	4000	6000	5'	3'	8.0	94	0.23	0.32
TR MB 080 2_10	40	80	180	4000	6000	5'	3'	8.0	94	0.20	0.29
TR MB 080 3_9	40	80	180	2900	3500	5'	3'	6.5	91	0.49	0.58
TR MB 080 3_12	70	100	250	2900	3500	5'	3'	6.5	91	0.47	0.56
TR MB 080 3_15	70	100	250	2900	3500	5'	3'	6.5	91	0.46	0.55
TR MB 080 3_16	70	100	250	3100	4500	5'	3'	6.5	91	0.32	0.41
TR MB 080 3_20	70	100	250	3200	4500	5'	3'	6.5	91	0.27	0.36
TR MB 080 3_25	70	100	250	3200	4500	5'	3'	6.5	91	0.27	0.36
TR MB 080 3_28	70	100	250	4000	6000	5'	3'	6.5	91	0.22	0.31
TR MB 080 3_30	40	80	180	4000	6000	5'	3'	6.5	91	0.20	0.29
TR MB 080 3_35	70	100	250	4000	6000	5'	3'	6.5	91	0.22	0.31
TR MB 080 3_36	50	80	200	3200	4500	5'	3'	6.5	91	0.20	0.29
TR MB 080 3_40	70	100	250	4000	6000	5'	3'	6.5	91	0.20	0.29
TR MB 080 3_50	70	100	250	4000	6000	5'	3'	6.5	91	0.19	0.28
TR MB 080 3_70	70	100	250	4000	6000	5'	3'	6.5	91	0.19	0.28
TR MB 080 3_100	40	80	180	4000	6000	5'	3'	6.5	91	0.19	0.28
TR MB 080 4_48	70	100	250	3100	4500	7'	5'	5.5	89	0.33	0.42
TR MB 080 4_64	70	100	250	3100	4500	7'	5'	5.5	89	0.32	0.41
TR MB 080 4_75	70	100	250	3200	4500	7'	5'	5.5	89	0.27	0.36
TR MB 080 4_80	70	100	250	3100	4500	7'	5'	5.5	89	0.32	0.41
TR MB 080 4_84	70	100	250	4000	6000	7'	5'	5.5	89	0.23	0.32
TR MB 080 4_90	40	80	180	4000	6000	7'	5'	5.5	89	0.20	0.29
TR MB 080 4_120	70	100	250	4000	6000	7'	5'	5.5	89	0.20	0.29
TR MB 080 4_125	70	100	250	3200	4500	7'	5'	5.5	89	0.27	0.36
TR MB 080 4_140	70	100	250	4000	6000	7'	5'	5.5	89	0.22	0.31
TR MB 080 4_150	70	100	250	4000	6000	7'	5'	5.5	89	0.20	0.29
TR MB 080 4_160	70	100	250	4000	6000	7'	5'	5.5	89	0.20	0.29
TR MB 080 4_175	70	100	250	4000	6000	7'	5'	5.5	89	0.22	0.31
TR MB 080 4_200	70	100	250	4000	6000	7'	5'	5.5	89	0.20	0.29
TR MB 080 4_210	70	100	250	4000	6000	7'	5'	5.5	89	0.20	0.29
TR MB 080 4_216	70	100	250	3200	4500	7'	5'	5.5	89	0.20	0.29
TR MB 080 4_250	70	100	250	4000	6000	7'	5'	5.5	89	0.19	0.28
TR MB 080 4_280	70	100	250	4000	6000	7'	5'	5.5	89	0.19	0.28
TR MB 080 4_350	70	100	250	4000	6000	7'	5'	5.5	89	0.19	0.28
TR MB 080 4_400	70	100	250	4000	6000	7'	5'	5.5	89	0.19	0.28
TR MB 080 4_500	70	100	250	4000	6000	7'	5'	5.5	89	0.19	0.28
TR MB 080 4_700	70	100	250	4000	6000	7'	5'	5.5	89	0.19	0.28
TR MB 080 4_1000	40	80	180	4000	6000	7'	5'	5.5	89	0.19	0.28

TR

www.reductor-mex.ru

TR 105

IS

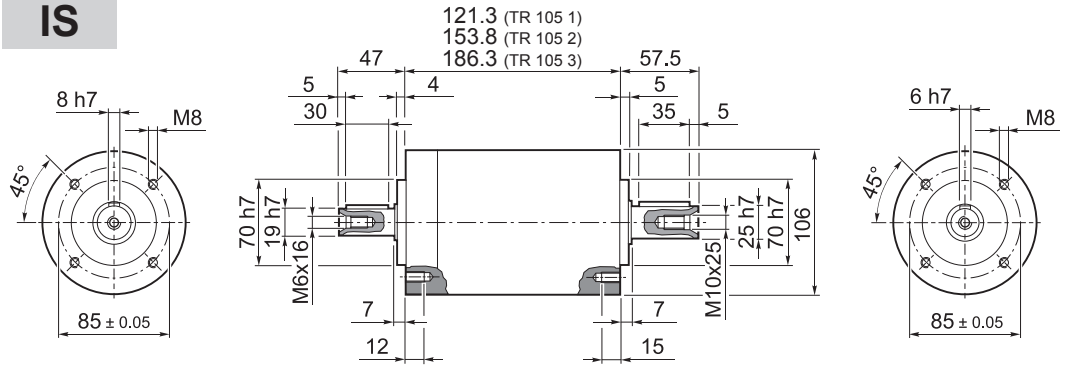

	Kg
TR 105 1	6.5
TR 105 2	8.5
TR 105 3	10.5

50D ... 130A1

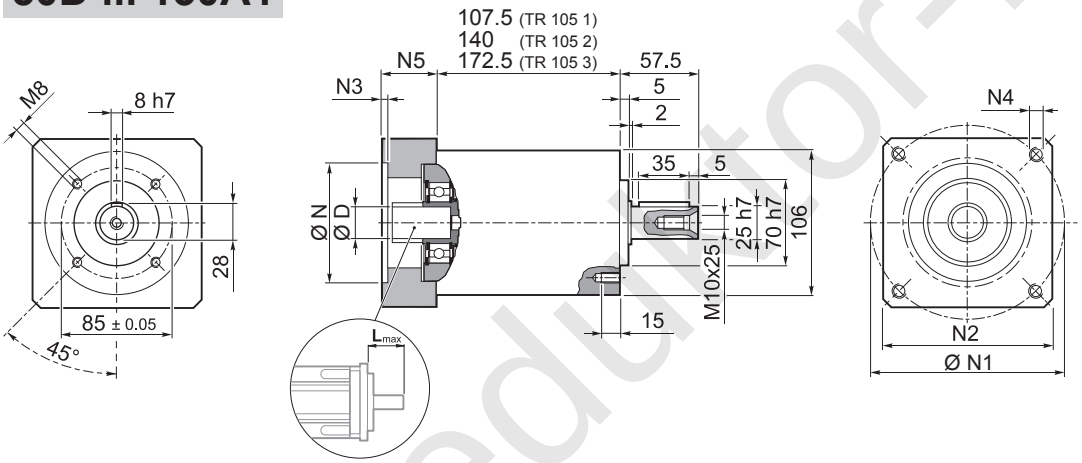

	Kg
TR 105 1	6.5
TR 105 2	8.5
TR 105 3	10.5

	D												N	N1	N2	N3	N4	N5	L_{max}
50D	11	12	12.7	14	15	15.875	16	19	–	–	–	–	50	95	100	5	M6x14	28	40
55A	11	12	12.7	14	15	15.875	16	19	–	–	–	–	55	125.7	105	5	M6x16	28	40
60A2	11	12	12.7	14	15	15.875	16	19	–	–	–	–	60	75	100	6.5	M5x14	28	40
60AH2	11	12	12.7	14	15	15.875	16	19	–	–	–	–	60	75	100	4	6.5	33	40
60B1	11	12	12.7	14	15	15.875	16	19	–	–	–	–	60	85	100	6.5	M5x14	28	40
70A1	11	12	12.7	14	15	15.875	16	19	–	–	–	–	70	85	100	6.5	M6x14	28	40
70AH1	11	12	12.7	14	15	15.875	16	19	–	–	–	–	70	85	100	4	6.5	33	40
70B1	11	12	12.7	14	15	15.875	16	19	–	–	–	–	70	90	100	6.5	M5x12	28	40
80A1	11	12	12.7	14	15	15.875	16	19	–	–	–	–	80	100	100	6.5	M6x16	28	40
80AH1	11	12	12.7	14	15	15.875	16	19	–	–	–	–	80	100	100	4	6.5	33	40
95A	11	12	12.7	14	15	15.875	16	19	–	–	–	–	95	115	100	6.5	M8x18	28	40
95A1	11	12	12.7	14	15	15.875	16	19	22	24	–	–	95	115	100	6.5	M8x18	38	50
95B	11	12	12.7	14	15	15.875	16	19	–	–	–	–	95	130	115	6.5	M8x18	28	40
110A	11	12	12.7	14	15	15.875	16	19	–	–	–	–	110	130	115	6.5	M8x18	28	40
110A1	11	12	12.7	14	15	15.875	16	19	22	24	–	–	110	130	115	6.5	M8x20	38	50
110B	11	12	12.7	14	15	15.875	16	19	22	24	–	–	110	145	120	6.5	M8x20	38	50
110B1	11	12	12.7	14	15	15.875	16	19	22	24	28	–	110	145	120	6.5	M8x20	48	60
130A	11	12	12.7	14	15	15.875	16	19	22	24	–	–	130	165	140	6.5	M10x20	38	50
130A1	11	12	12.7	14	15	15.875	16	19	22	24	28	32	130	165	140	6.5	M10x25	48	60

Please contact us for different motor adapters and input shaft bore.

www.reductor-mex.ru

TR 105

FM

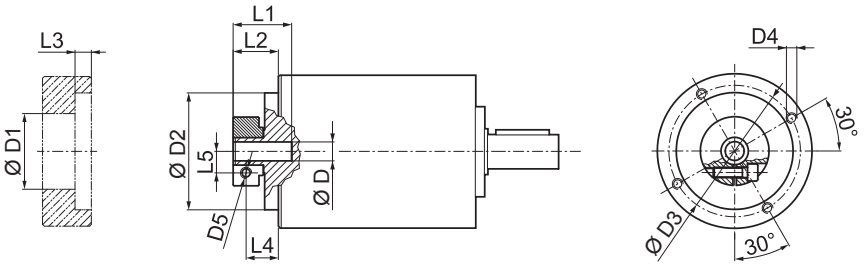

D				D1	D2	D3	D4	D5	L1	L2	L3	L4	L5
11	12	12.7		43	90	98	M6x15	M6	31.5	19.5	7.6	12	12.5
14	15	15.875	16	48	90	98	M6x15	M6	31.5	19.5	7.6	12	14.5
19				51	90	98	M6x15	M6	31.5	19.5	7.6	12	16.5
22	24			56.5	90	98	M6x15	M6	35	23	7.6	12	19
28				67	90	98	M6x15	M8	35	23	7.6	14	22.5
32				71	90	98	M6x15	M8	37	25	7.6	16	24.5

i	$M_{n\,2}$ [Nm]	$M_{a\,2}$ [Nm]	$M_{p\,2}$ [Nm]	n_1 [min^{-1}]	$n_{1\,max}$ [min^{-1}]	φ_S [arcmin]	φ_R [arcmin]	C_t [Nm/arcmin]	$R_{1\,max}$ [N]	$R_{2\,max}$ [N]	$A_{2\,max}$ [N]	η %	J_G [kgcm²] D 11 ... 12.7	14 ... 19	22 - 24	28 - 32
TR 105 1_3	100	180	360	2500	3500	5'	3'	24.0	600	3800	4000	97	1.70	1.78	2.22	2.59
TR 105 1_4	140	210	450	2800	4500	5'	3'	24.0	600	3800	4000	97	0.99	1.06	1.51	1.87
TR 105 1_5	140	210	450	3000	4500	5'	3'	24.0	600	3800	4000	97	0.72	0.79	1.23	1.60
TR 105 1_6	140	210	450	3000	4500	5'	3'	24.0	600	3800	4000	97	0.36	0.43	0.88	1.24
TR 105 1_7	140	210	450	3500	5000	5'	3'	24.0	600	3800	4000	97	0.47	0.55	0.99	1.35
TR 105 1_10	100	180	360	3500	5000	5'	3'	24.0	600	3800	4000	97	0.33	0.41	0.85	1.21
TR 105 2_9	100	180	360	2500	3500	5'	3'	21.5	600	3800	4000	94	1.58	1.63	2.07	2.44
TR 105 2_12	170	250	600	2500	3500	5'	3'	21.5	600	3800	4000	94	1.52	1.59	2.03	2.40
TR 105 2_15	170	250	600	2500	3500	5'	3'	21.5	600	3800	4000	94	1.47	1.55	1.99	2.36
TR 105 2_16	170	250	600	2800	4500	5'	3'	21.5	600	3800	4000	94	0.87	0.95	1.39	1.76
TR 105 2_20	170	250	600	3000	4500	5'	3'	21.5	600	3800	4000	94	0.86	0.93	1.37	1.74
TR 105 2_25	170	250	600	3000	4500	5'	3'	21.5	600	3800	4000	94	0.63	0.71	1.15	1.51
TR 105 2_28	170	250	600	3500	5000	5'	3'	21.5	600	3800	4000	94	0.43	0.51	0.95	1.32
TR 105 2_30	100	180	360	3500	5000	5'	3'	21.5	600	3800	4000	94	0.32	0.40	0.84	1.20
TR 105 2_35	170	250	600	3500	5000	5'	3'	21.5	600	3800	4000	94	0.43	0.50	0.95	1.31
TR 105 2_36	140	210	450	3000	4500	5'	3'	21.5	600	3800	4000	94	0.32	0.39	0.84	1.20
TR 105 2_40	170	250	600	3500	5000	5'	3'	21.5	600	3800	4000	94	0.31	0.39	0.83	1.20
TR 105 2_50	170	250	600	3500	5000	5'	3'	21.5	600	3800	4000	94	0.31	0.39	0.83	1.19
TR 105 2_70	170	250	600	3500	5000	5'	3'	21.5	600	3800	4000	94	0.31	0.38	0.83	1.19
TR 105 2_100	100	180	360	3500	5000	5'	3'	21.5	600	3800	4000	94	0.31	0.38	0.83	1.19
TR 105 3_48	170	250	600	2800	4500	7'	5'	18.0	600	3800	4000	91	0.91	0.98	1.42	1.79
TR 105 3_64	170	250	600	2800	4500	7'	5'	18.0	600	3800	4000	91	0.87	0.94	1.38	1.75
TR 105 3_75	170	250	600	3000	4500	7'	5'	18.0	600	3800	4000	91	0.66	0.74	1.18	1.55
TR 105 3_80	170	250	600	2800	4500	7'	5'	18.0	600	3800	4000	91	0.86	0.94	1.38	1.75
TR 105 3_84	170	250	600	3500	5000	7'	5'	18.0	600	3800	4000	91	0.44	0.52	0.96	1.33
TR 105 3_90	100	180	360	3500	5000	7'	5'	18.0	600	3800	4000	91	0.32	0.39	0.84	1.20
TR 105 3_120	170	250	600	3500	5000	7'	5'	18.0	600	3800	4000	91	0.32	0.39	0.84	1.20
TR 105 3_125	170	250	600	3000	4500	7'	5'	18.0	600	3800	4000	91	0.63	0.70	1.15	1.51
TR 105 3_140	170	250	600	3500	5000	7'	5'	18.0	600	3800	4000	91	0.43	0.51	0.95	1.32
TR 105 3_150	170	250	600	3500	5000	7'	5'	18.0	600	3800	4000	91	0.32	0.39	0.84	1.20
TR 105 3_160	170	250	600	3500	5000	7'	5'	18.0	600	3800	4000	91	0.31	0.39	0.83	1.21
TR 105 3_175	170	250	600	3500	5000	7'	5'	18.0	600	3800	4000	91	0.43	0.50	0.95	1.31
TR 105 3_200	170	250	600	3500	5000	7'	5'	18.0	600	3800	4000	91	0.31	0.39	0.83	1.20
TR 105 3_210	170	250	600	3500	5000	7'	5'	18.0	600	3800	4000	91	0.32	0.39	0.84	1.20
TR 105 3_216	170	250	600	3000	4500	7'	5'	18.0	600	3800	4000	91	0.31	0.39	0.83	1.20
TR 105 3_250	170	250	600	3500	5000	7'	5'	18.0	600	3800	4000	91	0.31	0.39	0.83	1.19
TR 105 3_280	170	250	600	3500	5000	7'	5'	18.0	600	3800	4000	91	0.31	0.38	0.83	1.19
TR 105 3_350	170	250	600	3500	5000	7'	5'	18.0	600	3800	4000	91	0.31	0.38	0.83	1.19
TR 105 3_400	170	250	600	3500	5000	7'	5'	18.0	600	3800	4000	91	0.31	0.38	0.83	1.19
TR 105 3_500	170	250	600	3500	5000	7'	5'	18.0	600	3800	4000	91	0.31	0.38	0.83	1.19
TR 105 3_700	170	250	600	3500	5000	7'	5'	18.0	600	3800	4000	91	0.31	0.38	0.83	1.19
TR 105 3_1000	100	180	360	3500	5000	7'	5'	18.0	600	3800	4000	91	0.31	0.38	0.83	1.19

TR

www.robotikon-mex.ru

TR G 105

50D ... 130A1

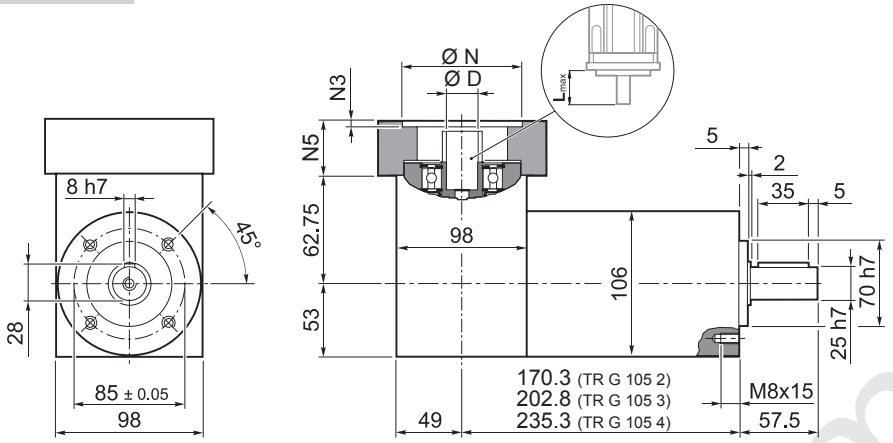

	Kg
TR G 105 2	8.5
TR G 105 3	10.5
TR G 105 4	12.5

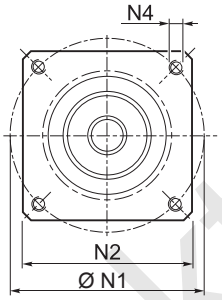

	D												N	N1	N2	N3	N4	N5	L_{max}
50D	11	12	12.7	14	15	15.875	16	19	–	–	–	–	50	95	100	5	M6x14	28	40
55A	11	12	12.7	14	15	15.875	16	19	–	–	–	–	55	125.7	105	5	M6x16	28	40
60A2	11	12	12.7	14	15	15.875	16	19	–	–	–	–	60	75	100	6.5	M5x14	28	40
60AH2	11	12	12.7	14	15	15.875	16	19	–	–	–	–	60	75	100	4	6.5	33	40
60B1	11	12	12.7	14	15	15.875	16	19	–	–	–	–	60	85	100	6.5	M5x14	28	40
70A1	11	12	12.7	14	15	15.875	16	19	–	–	–	–	70	85	100	6.5	M6x14	28	40
70AH1	11	12	12.7	14	15	15.875	16	19	–	–	–	–	70	85	100	4	6.5	33	40
70B1	11	12	12.7	14	15	15.875	16	19	–	–	–	–	70	90	100	6.5	M5x12	28	40
80A1	11	12	12.7	14	15	15.875	16	19	–	–	–	–	80	100	100	6.5	M6x16	28	40
80AH1	11	12	12.7	14	15	15.875	16	19	–	–	–	–	80	100	100	4	6.5	33	40
95A	11	12	12.7	14	15	15.875	16	19	–	–	–	–	95	115	100	6.5	M8x18	28	40
95A1	11	12	12.7	14	15	15.875	16	19	22	24	–	–	95	115	100	6.5	M8x18	38	50
95B	11	12	12.7	14	15	15.875	16	19	–	–	–	–	95	130	115	6.5	M8x18	28	40
110A	11	12	12.7	14	15	15.875	16	19	–	–	–	–	110	130	115	6.5	M8x18	28	40
110A1	11	12	12.7	14	15	15.875	16	19	22	24	–	–	110	130	115	6.5	M8x20	38	50
110B	11	12	12.7	14	15	15.875	16	19	22	24	–	–	110	145	120	6.5	M8x20	38	50
110B1	11	12	12.7	14	15	15.875	16	19	22	24	28	–	110	145	120	6.5	M8x20	48	60
130A	11	12	12.7	14	15	15.875	16	19	22	24	–	–	130	165	140	6.5	M10x20	38	50
130A1	11	12	12.7	14	15	15.875	16	19	22	24	28	32	130	165	140	6.5	M10x25	48	60

Please contact us for different motor adapters and input shaft bore.

www.reduktor-mex.ru

TR G 105

FM

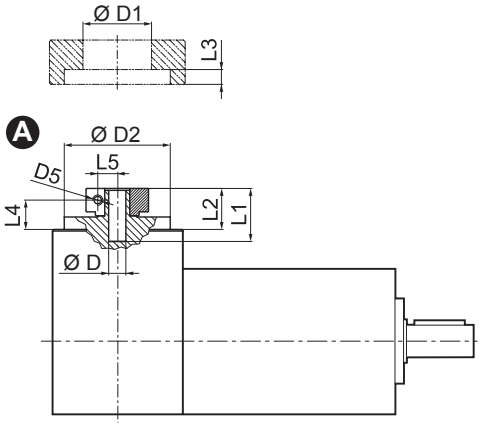

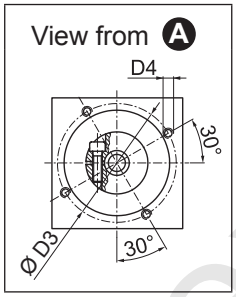

D				D1	D2	D3	D4	D5	L1	L2	L3	L4	L5
11	12	12.7		43	90	98	M6x15	M6	31.5	19.5	7.6	12	12.5
14	15	15.875	16	48	90	98	M6x15	M6	31.5	19.5	7.6	12	14.5
19				51	90	98	M6x15	M6	31.5	19.5	7.6	12	16.5
22	24			56.5	90	98	M6x15	M6	35	23	7.6	12	19
28				67	90	98	M6x15	M8	35	23	7.6	14	22.5
32				71	90	98	M6x15	M8	37	25	7.6	16	24.5

i	$M_{n\,2}$ [Nm]	$M_{a\,2}$ [Nm]	$M_{p\,2}$ [Nm]	n_1 [min^{-1}]	$n_{1\,max}$ [min^{-1}]	φ_S [arcmin]	φ_R [arcmin]	C_t [Nm/arcmin]	$R_{2\,max}$ [N]	$A_{2\,max}$ [N]	η %	J_G [kgcm^2] D 11 ... 12.7	14 ... 19	22 - 24	28 - 32
TR G 105 2_3	100	180	360	2500	3500	5'	3'	24.0	3800	4000	94	1.85	2.01	2.33	3.07
TR G 105 2_4	140	210	450	2800	4500	5'	3'	24.0	3800	4000	94	1.14	1.29	1.62	2.35
TR G 105 2_5	140	210	450	3000	4500	5'	3'	24.0	3800	4000	94	1.07	1.21	1.34	2.08
TR G 105 2_6	140	210	450	3000	4500	5'	3'	24.0	3800	4000	94	0.87	1.02	1.16	1.89
TR G 105 2_7	140	210	450	3500	5000	5'	3'	24.0	3800	4000	94	0.98	1.14	1.27	2.00
TR G 105 2_10	100	180	360	3500	5000	5'	3'	24.0	3800	4000	94	0.94	1.09	1.23	1.95
TR G 105 3_9	100	180	360	2500	3500	5'	3'	21.5	3800	4000	91	1.76	1.86	2.18	2.92
TR G 105 3_12	170	250	600	2500	3500	5'	3'	21.5	3800	4000	91	1.60	1.75	2.14	2.88
TR G 105 3_15	170	250	600	2500	3500	5'	3'	21.5	3800	4000	91	1.57	1.73	2.10	2.84
TR G 105 3_16	170	250	600	2800	4500	5'	3'	21.5	3800	4000	91	1.02	1.18	1.50	2.24
TR G 105 3_20	170	250	600	3000	4500	5'	3'	21.5	3800	4000	91	1.20	1.35	1.48	2.22
TR G 105 3_25	170	250	600	3000	4500	5'	3'	21.5	3800	4000	91	1.13	1.29	1.42	2.15
TR G 105 3_28	170	250	600	3500	5000	5'	3'	21.5	3800	4000	91	0.94	1.10	1.23	1.97
TR G 105 3_30	100	180	360	3500	5000	5'	3'	21.5	3800	4000	91	0.93	1.08	1.22	1.94
TR G 105 3_35	170	250	600	3500	5000	5'	3'	21.5	3800	4000	91	1.02	1.17	1.31	2.04
TR G 105 3_36	140	210	450	3000	4500	5'	3'	21.5	3800	4000	91	0.83	0.98	1.12	1.85
TR G 105 3_40	170	250	600	3500	5000	5'	3'	21.5	3800	4000	91	0.96	1.11	1.25	1.98
TR G 105 3_50	170	250	600	3500	5000	5'	3'	21.5	3800	4000	91	0.96	1.11	1.25	1.98
TR G 105 3_70	170	250	600	3500	5000	5'	3'	21.5	3800	4000	91	0.92	1.06	1.21	1.93
TR G 105 3_100	100	180	360	3500	5000	5'	3'	21.5	3800	4000	91	0.92	1.06	1.21	1.93
TR G 105 4_48	170	250	600	2800	4500	7'	5'	18.0	3800	4000	89	1.06	1.21	1.53	2.27
TR G 105 4_64	170	250	600	2800	4500	7'	5'	18.0	3800	4000	89	1.02	1.17	1.49	2.23
TR G 105 4_75	170	250	600	3000	4500	7'	5'	18.0	3800	4000	89	1.00	1.16	1.29	2.03
TR G 105 4_80	170	250	600	2800	4500	7'	5'	18.0	3800	4000	89	1.01	1.17	1.49	2.23
TR G 105 4_84	170	250	600	3500	5000	7'	5'	18.0	3800	4000	89	0.95	1.11	1.24	1.98
TR G 105 4_90	100	180	360	3500	5000	7'	5'	18.0	3800	4000	89	0.93	1.07	1.22	1.94
TR G 105 4_120	170	250	600	3500	5000	7'	5'	18.0	3800	4000	89	0.93	1.07	1.22	1.94
TR G 105 4_125	170	250	600	3000	4500	7'	5'	18.0	3800	4000	89	0.97	1.12	1.26	1.99
TR G 105 4_140	170	250	600	3500	5000	7'	5'	18.0	3800	4000	89	0.94	1.10	1.23	1.97
TR G 105 4_150	170	250	600	3500	5000	7'	5'	18.0	3800	4000	89	0.93	1.07	1.22	1.94
TR G 105 4_160	170	250	600	3500	5000	7'	5'	18.0	3800	4000	89	0.92	1.07	1.21	1.96
TR G 105 4_175	170	250	600	3500	5000	7'	5'	18.0	3800	4000	89	0.94	1.09	1.23	1.96
TR G 105 4_200	170	250	600	3500	5000	7'	5'	18.0	3800	4000	89	0.92	1.07	1.21	1.94
TR G 105 4_210	170	250	600	3500	5000	7'	5'	18.0	3800	4000	89	0.93	1.07	1.22	1.94
TR G 105 4_216	170	250	600	3000	4500	7'	5'	18.0	3800	4000	89	0.83	0.98	1.11	1.85
TR G 105 4_250	170	250	600	3500	5000	7'	5'	18.0	3800	4000	89	0.92	1.07	1.21	1.93
TR G 105 4_280	170	250	600	3500	5000	7'	5'	18.0	3800	4000	89	0.92	1.06	1.21	1.93
TR G 105 4_350	170	250	600	3500	5000	7'	5'	18.0	3800	4000	89	0.92	1.06	1.21	1.93
TR G 105 4_400	170	250	600	3500	5000	7'	5'	18.0	3800	4000	89	0.92	1.06	1.21	1.93
TR G 105 4_500	170	250	600	3500	5000	7'	5'	18.0	3800	4000	89	0.92	1.06	1.21	1.93
TR G 105 4_700	170	250	600	3500	5000	7'	5'	18.0	3800	4000	89	0.92	1.06	1.21	1.93
TR G 105 4_1000	100	180	360	3500	5000	7'	5'	18.0	3800	4000	89	0.92	1.06	1.21	1.93

www.motor-mex.ru

TR MB 105

50D ... 130A1

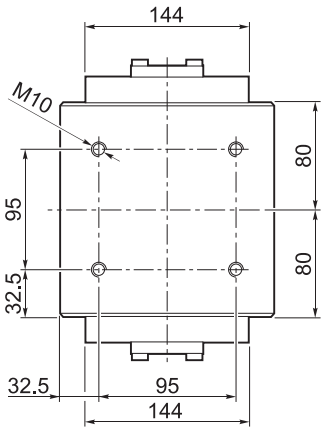

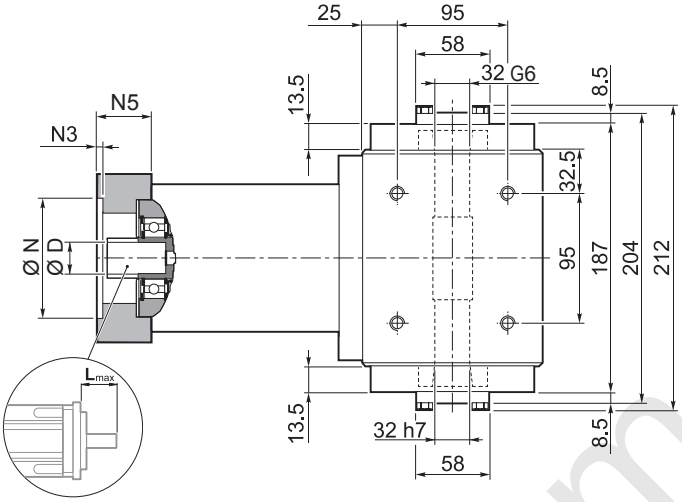

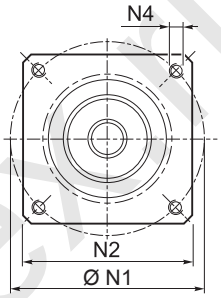

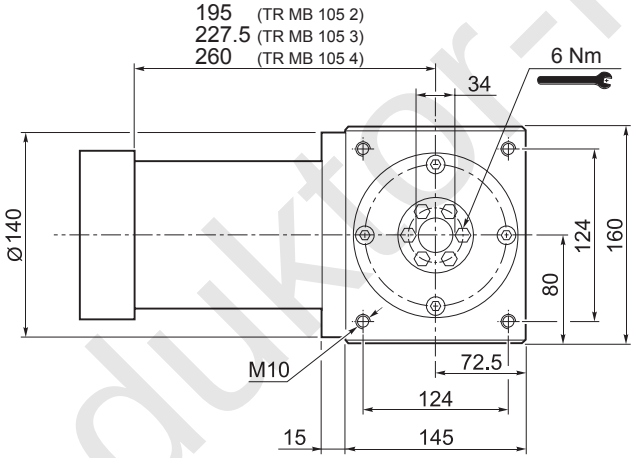

	Kg
TR MB 105 2	32
TR MB 105 3	34
TR MB 105 4	36

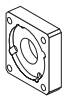	D												N	N1	N2	N3	N4	N5	L_{max}
50D	11	12	12.7	14	15	15.875	16	19	–	–	–	–	50	95	100	5	M6x14	28	40
55A	11	12	12.7	14	15	15.875	16	19	–	–	–	–	55	125.7	105	5	M6x16	28	40
60A2	11	12	12.7	14	15	15.875	16	19	–	–	–	–	60	75	100	6.5	M5x14	28	40
60AH2	11	12	12.7	14	15	15.875	16	19	–	–	–	–	60	75	100	4	6.5	33	40
60B1	11	12	12.7	14	15	15.875	16	19	–	–	–	–	60	85	100	6.5	M5x14	28	40
70A1	11	12	12.7	14	15	15.875	16	19	–	–	–	–	70	85	100	6.5	M6x14	28	40
70AH1	11	12	12.7	14	15	15.875	16	19	–	–	–	–	70	85	100	4	6.5	33	40
70B1	11	12	12.7	14	15	15.875	16	19	–	–	–	–	70	90	100	6.5	M5x12	28	40
80A1	11	12	12.7	14	15	15.875	16	19	–	–	–	–	80	100	100	6.5	M6x16	28	40
80AH1	11	12	12.7	14	15	15.875	16	19	–	–	–	–	80	100	100	4	6.5	33	40
95A	11	12	12.7	14	15	15.875	16	19	–	–	–	–	95	115	100	6.5	M8x18	28	40
95A1	11	12	12.7	14	15	15.875	16	19	22	24	–	–	95	115	100	6.5	M8x18	38	50
95B	11	12	12.7	14	15	15.875	16	19	–	–	–	–	95	130	115	6.5	M8x18	28	40
110A	11	12	12.7	14	15	15.875	16	19	–	–	–	–	110	130	115	6.5	M8x18	28	40
110A1	11	12	12.7	14	15	15.875	16	19	22	24	–	–	110	130	115	6.5	M8x20	38	50
110B	11	12	12.7	14	15	15.875	16	19	22	24	–	–	110	145	120	6.5	M8x20	38	50
110B1	11	12	12.7	14	15	15.875	16	19	22	24	28	–	110	145	120	6.5	M8x20	48	60
130A	11	12	12.7	14	15	15.875	16	19	22	24	–	–	130	165	140	6.5	M10x20	38	50
130A1	11	12	12.7	14	15	15.875	16	19	22	24	28	32	130	165	140	6.5	M10x25	48	60

Please contact us for different motor adapters and input shaft bore.

www.redukter-me.ru

TR MB 105

FM

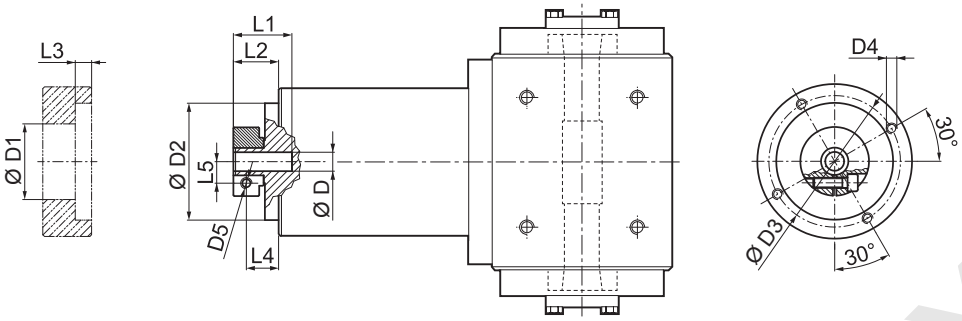

D	D1	D2	D3	D4	D5	L1	L2	L3	L4	L5
11 12 12.7	43	90	98	M6x15	M6	31.5	19.5	7.6	12	12.5
14 15 15.875 16	48	90	98	M6x15	M6	31.5	19.5	7.6	12	14.5
19	51	90	98	M6x15	M6	31.5	19.5	7.6	12	16.5
22 24	56.5	90	98	M6x15	M6	35	23	7.6	12	19
28	67	90	98	M6x15	M8	35	23	7.6	14	22.5
32	71	90	98	M6x15	M8	37	25	7.6	16	24.5

i	$M_{n\,2}$ [Nm]	$M_{a\,2}$ [Nm]	$M_{p\,2}$ [Nm]	n_1 [min^{-1}]	$n_{1\,max}$ [min^{-1}]	φ_S [arcmin]	φ_R [arcmin]	C_t [Nm/arcmin]	η %	J_G [kgcm^2] D 11 ... 12.7	14 ... 19	22 - 24	28 - 32
TR MB 105 2_3	100	180	360	2500	3500	5'	3'	24.0	94	1.70	1.78	2.22	2.59
TR MB 105 2_4	140	210	450	2800	4500	5'	3'	24.0	94	0.99	1.06	1.51	1.87
TR MB 105 2_5	140	210	450	3000	4500	5'	3'	24.0	94	0.72	0.79	1.23	1.60
TR MB 105 2_6	140	210	450	3000	4500	5'	3'	24.0	94	0.36	0.43	0.88	1.24
TR MB 105 2_7	140	210	450	3500	5000	5'	3'	24.0	94	0.47	0.55	0.99	1.35
TR MB 105 2_10	100	180	360	3500	5000	5'	3'	24.0	94	0.33	0.41	0.85	1.21
TR MB 105 3_9	100	180	360	2500	3500	5'	3'	21.5	91	1.58	1.63	2.07	2.44
TR MB 105 3_12	170	250	600	2500	3500	5'	3'	21.5	91	1.52	1.59	2.03	2.40
TR MB 105 3_15	170	250	600	2500	3500	5'	3'	21.5	91	1.47	1.55	1.99	2.36
TR MB 105 3_16	170	250	600	2800	4500	5'	3'	21.5	91	0.87	0.95	1.39	1.76
TR MB 105 3_20	170	250	600	3000	4500	5'	3'	21.5	91	0.86	0.93	1.37	1.74
TR MB 105 3_25	170	250	600	3000	4500	5'	3'	21.5	91	0.63	0.71	1.15	1.51
TR MB 105 3_28	170	250	600	3500	5000	5'	3'	21.5	91	0.43	0.51	0.95	1.32
TR MB 105 3_30	100	180	360	3500	5000	5'	3'	21.5	91	0.32	0.40	0.84	1.20
TR MB 105 3_35	170	250	600	3500	5000	5'	3'	21.5	91	0.43	0.50	0.95	1.31
TR MB 105 3_36	140	210	450	3000	4500	5'	3'	21.5	91	0.32	0.39	0.84	1.20
TR MB 105 3_40	170	250	600	3500	5000	5'	3'	21.5	91	0.31	0.39	0.83	1.20
TR MB 105 3_50	170	250	600	3500	5000	5'	3'	21.5	91	0.31	0.39	0.83	1.19
TR MB 105 3_70	170	250	600	3500	5000	5'	3'	21.5	91	0.31	0.38	0.83	1.19
TR MB 105 3_100	100	180	360	3500	5000	5'	3'	21.5	91	0.31	0.38	0.83	1.19
TR MB 105 4_48	170	250	600	2800	4500	7'	5'	18.0	89	0.91	0.98	1.42	1.79
TR MB 105 4_64	170	250	600	2800	4500	7'	5'	18.0	89	0.87	0.94	1.38	1.75
TR MB 105 4_75	170	250	600	3000	4500	7'	5'	18.0	89	0.66	0.74	1.18	1.55
TR MB 105 4_80	170	250	600	2800	4500	7'	5'	18.0	89	0.86	0.94	1.38	1.75
TR MB 105 4_84	170	250	600	3500	5000	7'	5'	18.0	89	0.44	0.52	0.96	1.33
TR MB 105 4_90	100	180	360	3500	5000	7'	5'	18.0	89	0.32	0.39	0.84	1.20
TR MB 105 4_120	170	250	600	3500	5000	7'	5'	18.0	89	0.32	0.39	0.84	1.20
TR MB 105 4_125	170	250	600	3000	4500	7'	5'	18.0	89	0.63	0.70	1.15	1.51
TR MB 105 4_140	170	250	600	3500	5000	7'	5'	18.0	89	0.43	0.51	0.95	1.32
TR MB 105 4_150	170	250	600	3500	5000	7'	5'	18.0	89	0.32	0.39	0.84	1.20
TR MB 105 4_160	170	250	600	3500	5000	7'	5'	18.0	89	0.31	0.39	0.83	1.21
TR MB 105 4_175	170	250	600	3500	5000	7'	5'	18.0	89	0.43	0.50	0.95	1.31
TR MB 105 4_200	170	250	600	3500	5000	7'	5'	18.0	89	0.31	0.39	0.83	1.20
TR MB 105 4_210	170	250	600	3500	5000	7'	5'	18.0	89	0.32	0.39	0.84	1.20
TR MB 105 4_216	170	250	600	3000	4500	7'	5'	18.0	89	0.31	0.39	0.83	1.20
TR MB 105 4_250	170	250	600	3500	5000	7'	5'	18.0	89	0.31	0.39	0.83	1.19
TR MB 105 4_280	170	250	600	3500	5000	7'	5'	18.0	89	0.31	0.38	0.83	1.19
TR MB 105 4_350	170	250	600	3500	5000	7'	5'	18.0	89	0.31	0.38	0.83	1.19
TR MB 105 4_400	170	250	600	3500	5000	7'	5'	18.0	89	0.31	0.38	0.83	1.19
TR MB 105 4_500	170	250	600	3500	5000	7'	5'	18.0	89	0.31	0.38	0.83	1.19
TR MB 105 4_700	170	250	600	3500	5000	7'	5'	18.0	89	0.31	0.38	0.83	1.19
TR MB 105 4_1000	100	180	360	3500	5000	7'	5'	18.0	89	0.31	0.38	0.83	1.19

TR

www.rektor-mex.ru

TR 130

IS

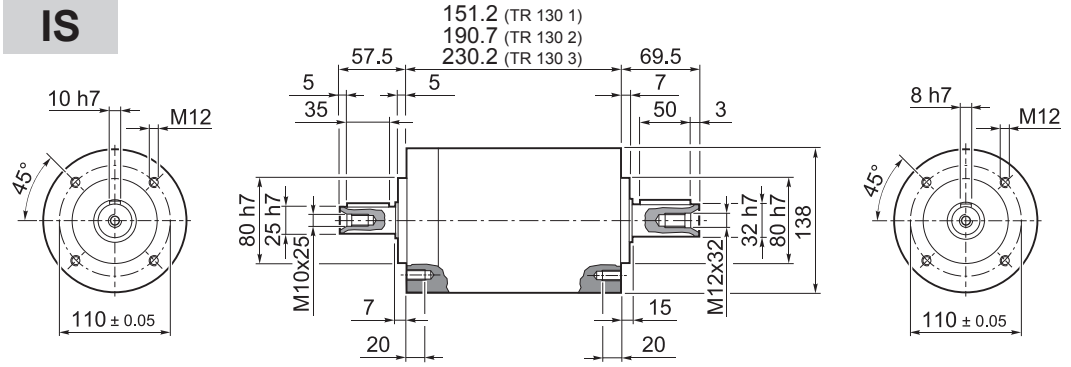

	Kg
TR 130 1	12.0
TR 130 2	15.5
TR 130 3	18.5

55A1 ... 180A1

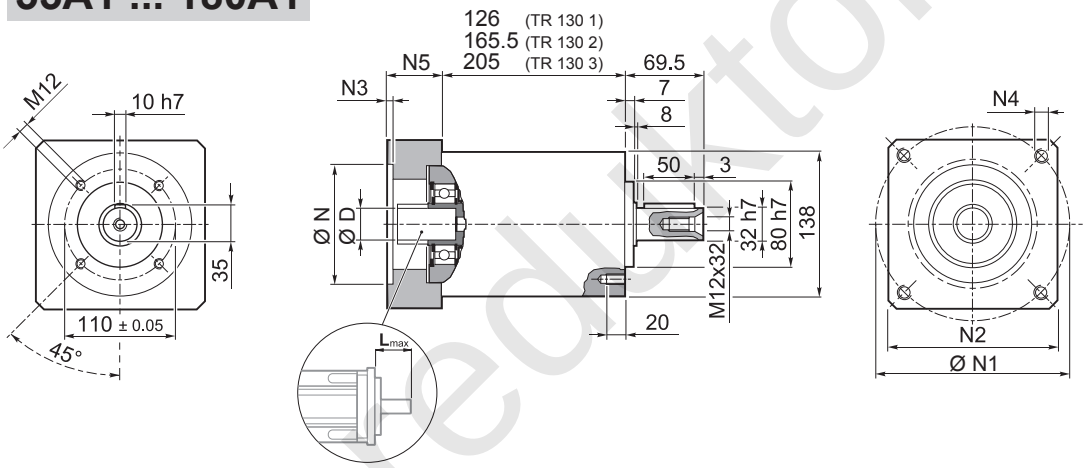

	Kg
TR 130 1	12.0
TR 130 2	15.5
TR 130 3	18.5

	D										N	N1	N2	N3	N4	N5	L_{max}
55A1	14	15.875	16	19	–	–	–	–	–	–	55.5	125.7	130	4	M6x15	39.5	50
80A2	14	15.875	16	19	–	–	–	–	–	–	80	100	130	4	M6x15	39.5	50
95A1	14	15.875	16	19	22	24	–	–	–	–	95	115	130	4	M8x20	39.5	50
110A1	14	15.875	16	19	22	24	–	–	–	–	110	130	130	4	M8x20	39.5	50
110B1	14	15.875	16	19	22	24	–	–	–	–	110	145	130	6.5	M8x20	49.5	60
114A0	14	15.875	16	19	22	24	–	–	–	–	114.3	200	170	5.5	M12x25	39.5	50
114A	14	15.875	16	19	22	24	28	32	35	38	114.3	200	170	5.5	M12x25	69.5	80
130A	14	15.875	16	19	22	24	–	–	–	–	130	165	140	4	M10x20	39.5	50
130A1	14	15.875	16	19	22	24	28	32	–	–	130	165	140	4	M10x20	49.5	60
180A	14	15.875	16	19	22	24	28	32	–	–	180	215	190	5.5	M14x25	49.5	60
180A1	14	15.875	16	19	22	24	28	32	35	38	180	215	190	5.5	M14x25	69.5	80

Please contact us for different motor adapters and input shaft bore.

www.reductor-mexico

TR 130

FM

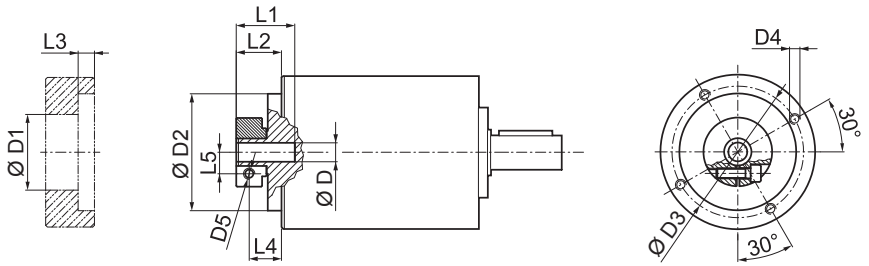

D			D1	D2	D3	D4	D5	L1	L2	L3	L4	L5
14	15.875	16	48	113	125.5	M8x15	M6	40	27.5	6	20	14.5
19			51	113	125.5	M8x15	M6	40	27.5	6	20	16.5
22	24		56.5	113	125.5	M8x15	M6	41	28.5	6	19.5	19
28			67	113	125.5	M8x15	M8	41	28.5	6	19.5	22.5
32			71	113	125.5	M8x15	M8	41	28.5	6	19.5	24.5
35			73	113	125.5	M8x15	M8	50	37.5	11.25	26	26
38			77.5	113	125.5	M8x15	M8	50	37.5	11.25	26	28

i	$M_{n\,2}$ [Nm]	$M_{a\,2}$ [Nm]	$M_{p\,2}$ [Nm]	n_1 [min⁻¹]	$n_{1\,max}$ [min⁻¹]	φ_S [arcmin]	φ_R [arcmin]	C_t [Nm/arcmin]	$R_{1\,max}$ [N]	$R_{2\,max}$ [N]	$A_{2\,max}$ [N]	η %	J_G [kgcm²] D 14 ... 19	22 - 24	28 - 32	35 - 38
TR 130 1_3	215	400	800	2100	3000	5'	3'	45.0	800	5500	6500	97	5.25	5.46	5.81	7.16
TR 130 1_4	380	600	1100	2400	3500	5'	3'	45.0	800	5500	6500	97	3.06	3.26	3.61	4.97
TR 130 1_5	380	600	1100	2900	3500	5'	3'	45.0	800	5500	6500	97	2.22	2.42	2.77	4.13
TR 130 1_6	380	600	1100	2900	3500	5'	3'	45.0	800	5500	6500	97	1.19	1.40	1.75	3.10
TR 130 1_7	380	600	1100	3200	4000	5'	3'	45.0	800	5500	6500	97	1.47	1.68	2.03	3.38
TR 130 1_10	215	400	800	3200	4000	5'	3'	45.0	800	5500	6500	97	1.04	1.25	1.60	2.95
TR 130 2_9	215	400	800	2100	3000	5'	3'	38.5	800	5500	6500	94	4.82	5.02	5.37	6.72
TR 130 2_12	450	700	1300	2100	3000	5'	3'	38.5	800	5500	6500	94	4.57	4.78	5.13	6.48
TR 130 2_15	450	700	1300	2100	3000	5'	3'	38.5	800	5500	6500	94	4.48	4.69	5.04	6.39
TR 130 2_16	450	700	1300	2400	3500	5'	3'	38.5	800	5500	6500	94	2.67	2.88	3.23	4.58
TR 130 2_20	450	700	1300	2900	3500	5'	3'	38.5	800	5500	6500	94	1.97	2.18	2.53	3.88
TR 130 2_25	450	700	1300	2900	3500	5'	3'	38.5	800	5500	6500	94	1.94	2.15	2.50	3.85
TR 130 2_28	450	700	1300	3200	4000	5'	3'	38.5	800	5500	6500	94	1.34	1.55	1.90	3.25
TR 130 2_30	215	400	800	3200	4000	5'	3'	38.5	800	5500	6500	94	1.00	1.21	1.56	2.91
TR 130 2_35	450	700	1300	3200	4000	5'	3'	38.5	800	5500	6500	94	1.33	1.53	1.88	3.24
TR 130 2_36	380	600	1100	2900	3500	5'	3'	38.5	800	5500	6500	94	1.05	1.26	1.61	2.96
TR 130 2_40	450	700	1300	3200	4000	5'	3'	38.5	800	5500	6500	94	0.98	1.19	1.54	2.89
TR 130 2_50	450	700	1300	3200	4000	5'	3'	38.5	800	5500	6500	94	0.97	1.18	1.53	2.88
TR 130 2_70	450	700	1300	3200	4000	5'	3'	38.5	800	5500	6500	94	0.96	1.17	1.52	2.87
TR 130 2_100	215	400	800	3200	4000	5'	3'	38.5	800	5500	6500	94	0.96	1.17	1.52	2.87
TR 130 3_48	450	700	1300	2400	3500	7'	5'	30.0	800	5500	6500	91	2.77	2.98	3.33	4.68
TR 130 3_64	450	700	1300	2400	3500	7'	5'	30.0	800	5500	6500	91	2.65	2.86	3.21	4.56
TR 130 3_75	450	700	1300	2900	3500	7'	5'	30.0	800	5500	6500	91	2.03	2.24	2.59	3.94
TR 130 3_80	450	700	1300	2400	3500	7'	5'	30.0	800	5500	6500	91	2.65	2.85	3.20	4.56
TR 130 3_84	450	700	1300	3200	4000	7'	5'	30.0	800	5500	6500	91	1.37	1.58	1.93	3.28
TR 130 3_90	215	400	800	3200	4000	7'	5'	30.0	800	5500	6500	91	1.00	1.20	1.55	2.91
TR 130 3_120	450	700	1300	3200	4000	7'	5'	30.0	800	5500	6500	91	0.99	1.20	1.55	2.90
TR 130 3_125	450	700	1300	2900	3500	7'	5'	30.0	800	5500	6500	91	1.93	2.13	2.48	3.84
TR 130 3_140	450	700	1300	3200	4000	7'	5'	30.0	800	5500	6500	91	1.34	1.54	1.89	3.25
TR 130 3_150	450	700	1300	3200	4000	7'	5'	30.0	800	5500	6500	91	0.99	1.20	1.55	2.90
TR 130 3_160	450	700	1300	3200	4000	7'	5'	30.0	800	5500	6500	91	0.98	1.18	1.53	2.89
TR 130 3_175	450	700	1300	3200	4000	7'	5'	30.0	800	5500	6500	91	1.32	1.53	1.88	3.23
TR 130 3_200	450	700	1300	3200	4000	7'	5'	30.0	800	5500	6500	91	0.97	1.18	1.53	2.88
TR 130 3_210	450	700	1300	3200	4000	7'	5'	30.0	800	5500	6500	91	0.99	1.20	1.55	2.90
TR 130 3_216	450	700	1300	2900	3500	7'	5'	30.0	800	5500	6500	91	1.05	1.26	1.61	2.96
TR 130 3_250	450	700	1300	3200	4000	7'	5'	30.0	800	5500	6500	91	0.97	1.18	1.53	2.88
TR 130 3_280	450	700	1300	3200	4000	7'	5'	30.0	800	5500	6500	91	0.96	1.17	1.52	2.87
TR 130 3_350	450	700	1300	3200	4000	7'	5'	30.0	800	5500	6500	91	0.96	1.17	1.52	2.87
TR 130 3_400	450	700	1300	3200	4000	7'	5'	30.0	800	5500	6500	91	0.96	1.17	1.52	2.87
TR 130 3_500	450	700	1300	3200	4000	7'	5'	30.0	800	5500	6500	91	0.96	1.17	1.52	2.87
TR 130 3_700	450	700	1300	3200	4000	7'	5'	30.0	800	5500	6500	91	0.96	1.17	1.52	2.87
TR 130 3_1000	215	400	800	3200	4000	7'	5'	30.0	800	5500	6500	91	0.96	1.17	1.52	2.87

www.kontur-niex.ru

TR G 130

55A1 ... 180A1

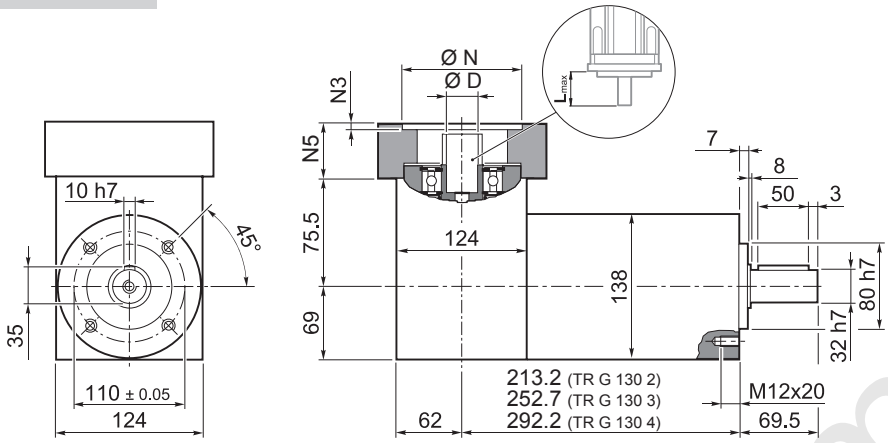

	Kg
TR G 130 2	16.0
TR G 130 3	19.5
TR G 130 4	22.5

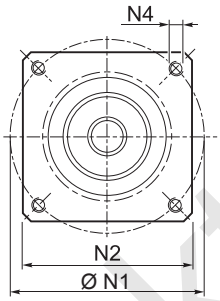

	D										N	N1	N2	N3	N4	N5	L_{max}
55A1	14	15.875	16	19	–	–	–	–	–	–	55.5	125.7	130	4	M6x15	39.5	50
80A2	14	15.875	16	19	–	–	–	–	–	–	80	100	130	4	M6x15	39.5	50
95A1	14	15.875	16	19	22	24	–	–	–	–	95	115	130	4	M8x20	39.5	50
110A1	14	15.875	16	19	22	24	–	–	–	–	110	130	130	4	M8x20	39.5	50
110B1	14	15.875	16	19	22	24	–	–	–	–	110	145	130	6.5	M8x20	49.5	60
114A0	14	15.875	16	19	22	24	–	–	–	–	114.3	200	170	5.5	M12x25	39.5	50
114A	14	15.875	16	19	22	24	28	32	35	38	114.3	200	170	5.5	M12x25	69.5	80
130A	14	15.875	16	19	22	24	–	–	–	–	130	165	140	4	M10x20	39.5	50
130A1	14	15.875	16	19	22	24	28	32	–	–	130	165	140	4	M10x20	49.5	60
180A	14	15.875	16	19	22	24	28	32	–	–	180	215	190	5.5	M14x25	49.5	60
180A1	14	15.875	16	19	22	24	28	32	35	38	180	215	190	5.5	M14x25	69.5	80

Please contact us for different motor adapters and input shaft bore.

www.reduktor-mex.ru

TR G 130

FM

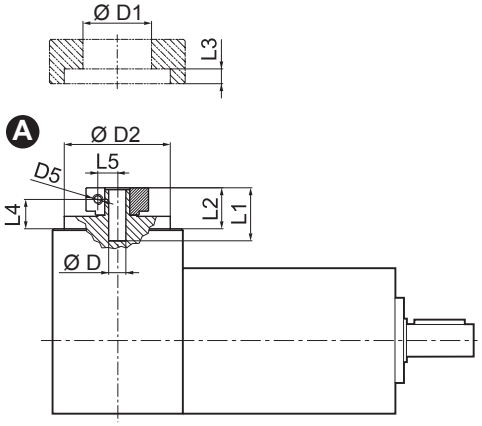

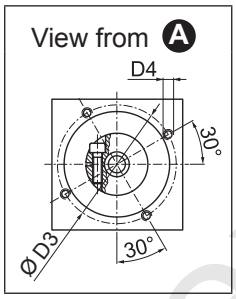

D			D1	D2	D3	D4	D5	L1	L2	L3	L4	L5
14	15.875	16	48	113	125.5	M8x15	M6	40	27.5	6	20	14.5
19			51	113	125.5	M8x15	M6	40	27.5	6	20	16.5
22	24		56.5	113	125.5	M8x15	M6	41	28.5	6	19.5	19
28			67	113	125.5	M8x15	M8	41	28.5	6	19.5	22.5
32			71	113	125.5	M8x15	M8	41	28.5	6	19.5	24.5
35			73	113	125.5	M8x15	M8	50	37.5	11.25	26	26
38			77.5	113	125.5	M8x15	M8	50	37.5	11.25	26	28

	i	$M_{n\,2}$ [Nm]	$M_{a\,2}$ [Nm]	$M_{p\,2}$ [Nm]	n_1 [min⁻¹]	$n_{1\,max}$ [min⁻¹]	φ_S [arcmin]	φ_R [arcmin]	C_t [Nm/arcmin]	$R_{2\,max}$ [N]	$A_{2\,max}$ [N]	η %	J_G [kgcm²] D 14 ... 19	22 - 24	28 - 32	35 - 38
TR G 130 2_3		215	400	800	2100	3000	5'	3'	45.0	5500	6500	94	7.09	7.28	7.66	10.37
TR G 130 2_4		380	600	1100	2400	3500	5'	3'	45.0	5500	6500	94	4.90	5.08	5.46	8.18
TR G 130 2_5		380	600	1100	2900	3500	5'	3'	45.0	5500	6500	94	4.81	4.99	5.38	8.10
TR G 130 2_6		380	600	1100	2900	3500	5'	3'	45.0	5500	6500	94	4.45	4.64	5.03	7.73
TR G 130 2_7		380	600	1100	3200	4000	5'	3'	45.0	5500	6500	94	4.73	4.92	5.31	8.01
TR G 130 2_10		215	400	800	3200	4000	5'	3'	45.0	5500	6500	94	4.68	4.88	5.26	7.97
TR G 130 3_9		215	400	800	2100	3000	5'	3'	38.5	5500	6500	91	6.66	6.84	7.22	9.93
TR G 130 3_12		450	700	1300	2100	3000	5'	3'	38.5	5500	6500	91	6.25	6.45	6.84	9.54
TR G 130 3_15		450	700	1300	2100	3000	5'	3'	38.5	5500	6500	91	6.25	6.44	6.83	9.53
TR G 130 3_16		450	700	1300	2400	3500	5'	3'	38.5	5500	6500	91	4.51	4.70	5.08	7.79
TR G 130 3_20		450	700	1300	2900	3500	5'	3'	38.5	5500	6500	91	4.56	5.36	5.75	8.45
TR G 130 3_25		450	700	1300	2900	3500	5'	3'	38.5	5500	6500	91	5.13	4.72	5.11	7.82
TR G 130 3_28		450	700	1300	3200	4000	5'	3'	38.5	5500	6500	91	4.60	4.79	5.18	7.88
TR G 130 3_30		215	400	800	3200	4000	5'	3'	38.5	5500	6500	91	4.64	4.84	5.22	7.93
TR G 130 3_35		450	700	1300	3200	4000	5'	3'	38.5	5500	6500	91	4.92	5.10	5.49	8.20
TR G 130 3_36		380	600	1100	2900	3500	5'	3'	38.5	5500	6500	91	4.31	4.50	4.89	7.59
TR G 130 3_40		450	700	1300	3200	4000	5'	3'	38.5	5500	6500	91	4.77	4.96	5.35	8.05
TR G 130 3_50		450	700	1300	3200	4000	5'	3'	38.5	5500	6500	91	4.76	4.96	5.34	8.05
TR G 130 3_70		450	700	1300	3200	4000	5'	3'	38.5	5500	6500	91	4.60	4.80	5.18	7.89
TR G 130 3_100		215	400	800	3200	4000	5'	3'	38.5	5500	6500	91	4.60	4.80	5.18	7.89
TR G 130 4_48		450	700	1300	2400	3500	7'	5'	30.0	5500	6500	89	4.61	4.81	5.18	7.89
TR G 130 4_64		450	700	1300	2400	3500	7'	5'	30.0	5500	6500	89	4.49	4.68	5.06	7.77
TR G 130 4_75		450	700	1300	2900	3500	7'	5'	30.0	5500	6500	89	4.62	4.81	5.20	7.91
TR G 130 4_80		450	700	1300	2400	3500	7'	5'	30.0	5500	6500	89	4.49	4.67	5.05	7.77
TR G 130 4_84		450	700	1300	3200	4000	7'	5'	30.0	5500	6500	89	4.63	4.82	5.21	7.91
TR G 130 4_90		215	400	800	3200	4000	7'	5'	30.0	5500	6500	89	4.64	4.83	5.21	7.93
TR G 130 4_120		450	700	1300	3200	4000	7'	5'	30.0	5500	6500	89	4.63	4.83	5.21	7.92
TR G 130 4_125		450	700	1300	2900	3500	7'	5'	30.0	5500	6500	89	4.52	4.70	5.09	7.81
TR G 130 4_140		450	700	1300	3200	4000	7'	5'	30.0	5500	6500	89	4.60	4.78	5.17	7.88
TR G 130 4_150		450	700	1300	3200	4000	7'	5'	30.0	5500	6500	89	4.63	4.83	5.21	7.92
TR G 130 4_160		450	700	1300	3200	4000	7'	5'	30.0	5500	6500	89	4.62	4.81	5.19	7.91
TR G 130 4_175		450	700	1300	3200	4000	7'	5'	30.0	5500	6500	89	4.58	4.77	5.16	7.86
TR G 130 4_200		450	700	1300	3200	4000	7'	5'	30.0	5500	6500	89	4.61	4.81	5.19	7.90
TR G 130 4_210		450	700	1300	3200	4000	7'	5'	30.0	5500	6500	89	4.63	4.83	5.21	7.92
TR G 130 4_216		450	700	1300	2900	3500	7'	5'	30.0	5500	6500	89	4.31	4.50	4.89	7.59
TR G 130 4_250		450	700	1300	3200	4000	7'	5'	30.0	5500	6500	89	4.61	4.81	5.19	7.90
TR G 130 4_280		450	700	1300	3200	4000	7'	5'	30.0	5500	6500	89	4.60	4.80	5.18	7.89
TR G 130 4_350		450	700	1300	3200	4000	7'	5'	30.0	5500	6500	89	4.60	4.80	5.18	7.89
TR G 130 4_400		450	700	1300	3200	4000	7'	5'	30.0	5500	6500	89	4.60	4.80	5.18	7.89
TR G 130 4_500		450	700	1300	3200	4000	7'	5'	30.0	5500	6500	89	4.60	4.80	5.18	7.89
TR G 130 4_700		450	700	1300	3200	4000	7'	5'	30.0	5500	6500	89	4.60	4.80	5.18	7.89
TR G 130 4_1000		215	400	800	3200	4000	7'	5'	30.0	5500	6500	89	4.60	4.80	5.18	7.89

www.motor-mex.ru

TR MB 130

55A1 ... 180A1

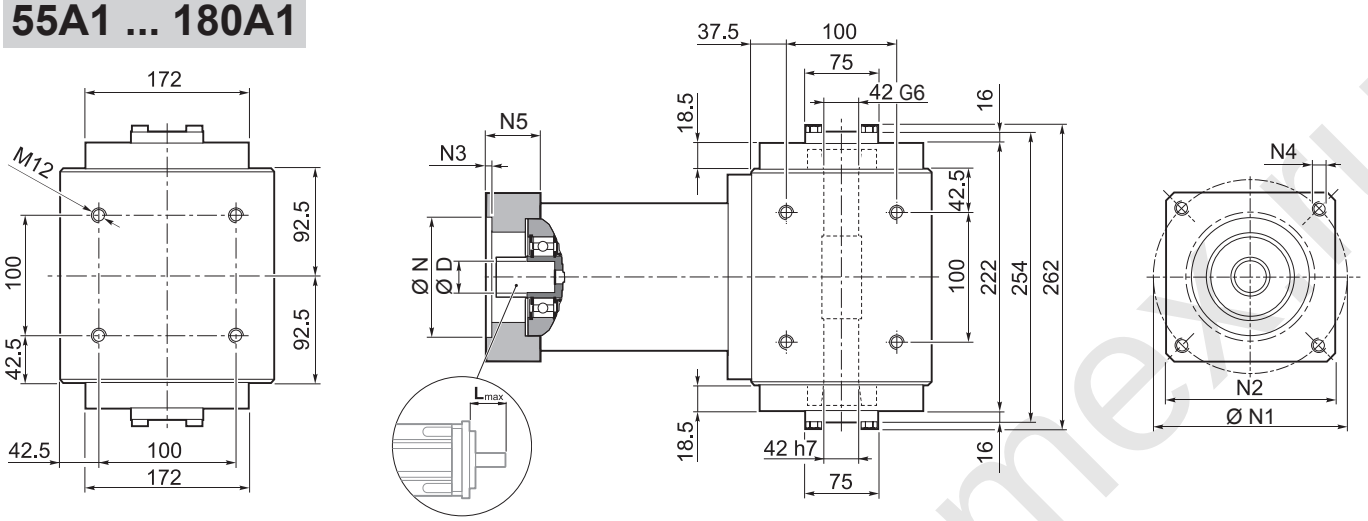

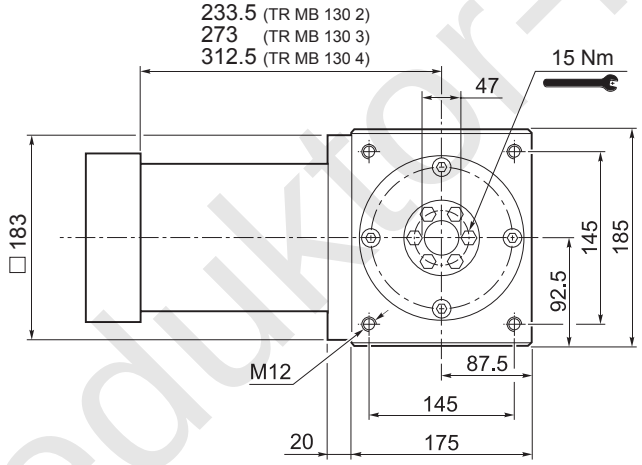

	Kg
TR MB 130 2	54
TR MB 130 3	58
TR MB 130 4	61

	D										N	N1	N2	N3	N4	N5	L_{max}
55A1	14	15.875	16	19	–	–	–	–	–	–	55.5	125.7	130	4	M6x15	39.5	50
80A2	14	15.875	16	19	–	–	–	–	–	–	80	100	130	4	M6x15	39.5	50
95A1	14	15.875	16	19	22	24	–	–	–	–	95	115	130	4	M8x20	39.5	50
110A1	14	15.875	16	19	22	24	–	–	–	–	110	130	130	4	M8x20	39.5	50
110B1	14	15.875	16	19	22	24	–	–	–	–	110	145	130	6.5	M8x20	49.5	60
114A0	14	15.875	16	19	22	24	–	–	–	–	114.3	200	170	5.5	M12x25	39.5	50
114A	14	15.875	16	19	22	24	28	32	35	38	114.3	200	170	5.5	M12x25	69.5	80
130A	14	15.875	16	19	22	24	–	–	–	–	130	165	140	4	M10x20	39.5	50
130A1	14	15.875	16	19	22	24	28	32	–	–	130	165	140	4	M10x20	49.5	60
180A	14	15.875	16	19	22	24	28	32	–	–	180	215	190	5.5	M14x25	49.5	60
180A1	14	15.875	16	19	22	24	28	32	35	38	180	215	190	5.5	M14x25	69.5	80

Please contact us for different motor adapters and input shaft bore.

www.redukter-mex.ru

TR MB 130

FM

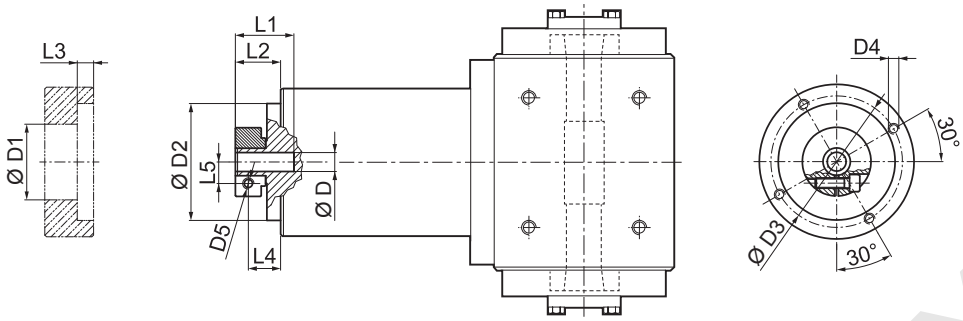

D	D1	D2	D3	D4	D5	L1	L2	L3	L4	L5
14 15.875 16	48	113	125.5	M8x15	M6	40	27.5	6	20	14.5
19	51	113	125.5	M8x15	M6	40	27.5	6	20	16.5
22 24	56.5	113	125.5	M8x15	M6	41	28.5	6	19.5	19
28	67	113	125.5	M8x15	M8	41	28.5	6	19.5	22.5
32	71	113	125.5	M8x15	M8	41	28.5	6	19.5	24.5
35	73	113	125.5	M8x15	M8	50	37.5	11.25	26	26
38	77.5	113	125.5	M8x15	M8	50	37.5	11.25	26	28

i	$M_{n\,2}$ [Nm]	$M_{a\,2}$ [Nm]	$M_{p\,2}$ [Nm]	n_1 [min^{-1}]	$n_{1\,max}$ [min^{-1}]	φ_S [arcmin]	φ_R [arcmin]	C_t [Nm/arcmin]	η %	J_G [kgcm^2] D 14 ... 19	22 - 24	28 - 32	35 - 38
TR MB 130 2_3	215	400	800	2100	3000	5'	3'	45.0	94	5.25	5.46	5.81	7.16
TR MB 130 2_4	380	600	1100	2400	3500	5'	3'	45.0	94	3.06	3.26	3.61	4.97
TR MB 130 2_5	380	600	1100	2900	3500	5'	3'	45.0	94	2.22	2.42	2.77	4.13
TR MB 130 2_6	380	600	1100	2900	3500	5'	3'	45.0	94	1.19	1.40	1.75	3.10
TR MB 130 2_7	380	600	1100	3200	4000	5'	3'	45.0	94	1.47	1.68	2.03	3.38
TR MB 130 2_10	215	400	800	3200	4000	5'	3'	45.0	94	1.04	1.25	1.60	2.95
TR MB 130 3_9	215	400	800	2100	3000	5'	3'	38.5	91	4.82	5.02	5.37	6.72
TR MB 130 3_12	450	700	1300	2100	3000	5'	3'	38.5	91	4.57	4.78	5.13	6.48
TR MB 130 3_15	450	700	1300	2100	3000	5'	3'	38.5	91	4.48	4.69	5.04	6.39
TR MB 130 3_16	450	700	1300	2400	3500	5'	3'	38.5	91	2.67	2.88	3.23	4.58
TR MB 130 3_20	450	700	1300	2900	3500	5'	3'	38.5	91	1.97	2.18	2.53	3.88
TR MB 130 3_25	450	700	1300	2900	3500	5'	3'	38.5	91	1.94	2.15	2.50	3.85
TR MB 130 3_28	450	700	1300	3200	4000	5'	3'	38.5	91	1.34	1.55	1.90	3.25
TR MB 130 3_30	215	400	800	3200	4000	5'	3'	38.5	91	1.00	1.21	1.56	2.91
TR MB 130 3_35	450	700	1300	3200	4000	5'	3'	38.5	91	1.33	1.53	1.88	3.24
TR MB 130 3_36	380	600	1100	2900	3500	5'	3'	38.5	91	1.05	1.26	1.61	2.96
TR MB 130 3_40	450	700	1300	3200	4000	5'	3'	38.5	91	0.98	1.19	1.54	2.89
TR MB 130 3_50	450	700	1300	3200	4000	5'	3'	38.5	91	0.97	1.18	1.53	2.88
TR MB 130 3_70	450	700	1300	3200	4000	5'	3'	38.5	91	0.96	1.17	1.52	2.87
TR MB 130 3_100	215	400	800	3200	4000	5'	3'	38.5	91	0.96	1.17	1.52	2.87
TR MB 130 4_48	450	700	1300	2400	3500	7'	5'	30.0	89	2.77	2.98	3.33	4.68
TR MB 130 4_64	450	700	1300	2400	3500	7'	5'	30.0	89	2.65	2.86	3.21	4.56
TR MB 130 4_75	450	700	1300	2900	3500	7'	5'	30.0	89	2.03	2.24	2.59	3.94
TR MB 130 4_80	450	700	1300	2400	3500	7'	5'	30.0	89	2.65	2.85	3.20	4.56
TR MB 130 4_84	450	700	1300	3200	4000	7'	5'	30.0	89	1.37	1.58	1.93	3.28
TR MB 130 4_90	215	400	800	3200	4000	7'	5'	30.0	89	1.00	1.20	1.55	2.91
TR MB 130 4_120	450	700	1300	3200	4000	7'	5'	30.0	89	0.99	1.20	1.55	2.90
TR MB 130 4_125	450	700	1300	2900	3500	7'	5'	30.0	89	1.93	2.13	2.48	3.84
TR MB 130 4_140	450	700	1300	3200	4000	7'	5'	30.0	89	1.34	1.54	1.89	3.25
TR MB 130 4_150	450	700	1300	3200	4000	7'	5'	30.0	89	0.99	1.20	1.55	2.90
TR MB 130 4_160	450	700	1300	3200	4000	7'	5'	30.0	89	0.98	1.18	1.53	2.89
TR MB 130 4_175	450	700	1300	3200	4000	7'	5'	30.0	89	1.32	1.53	1.88	3.23
TR MB 130 4_200	450	700	1300	3200	4000	7'	5'	30.0	89	0.97	1.18	1.53	2.88
TR MB 130 4_210	450	700	1300	3200	4000	7'	5'	30.0	89	0.99	1.20	1.55	2.90
TR MB 130 4_216	450	700	1300	2900	3500	7'	5'	30.0	89	1.05	1.26	1.61	2.96
TR MB 130 4_250	450	700	1300	3200	4000	7'	5'	30.0	89	0.97	1.18	1.53	2.88
TR MB 130 4_280	450	700	1300	3200	4000	7'	5'	30.0	89	0.96	1.17	1.52	2.87
TR MB 130 4_350	450	700	1300	3200	4000	7'	5'	30.0	89	0.96	1.17	1.52	2.87
TR MB 130 4_400	450	700	1300	3200	4000	7'	5'	30.0	89	0.96	1.17	1.52	2.87
TR MB 130 4_500	450	700	1300	3200	4000	7'	5'	30.0	89	0.96	1.17	1.52	2.87
TR MB 130 4_700	450	700	1300	3200	4000	7'	5'	30.0	89	0.96	1.17	1.52	2.87
TR MB 130 4_1000	215	400	800	3200	4000	7'	5'	30.0	89	0.96	1.17	1.52	2.87

TR

www.redmotor-nex.ru

TR 160

IS

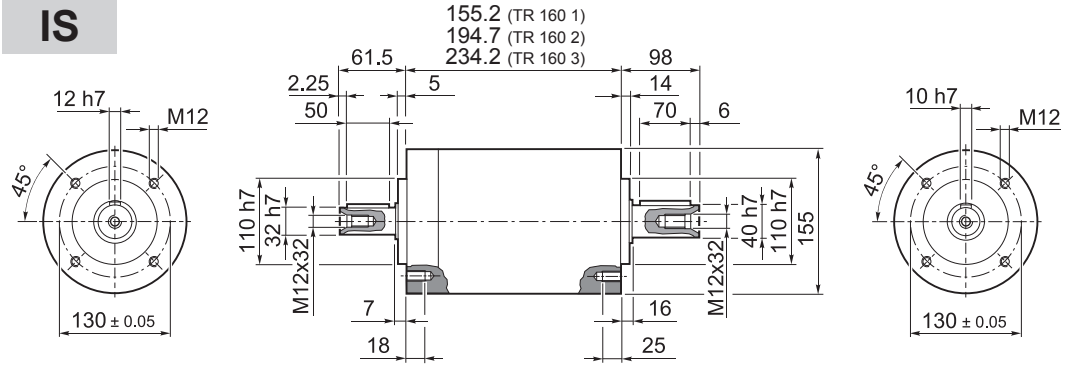

	Kg
TR 160 1	17.0
TR 160 2	21
TR 160 3	28

TR

55A1 ... 180A1

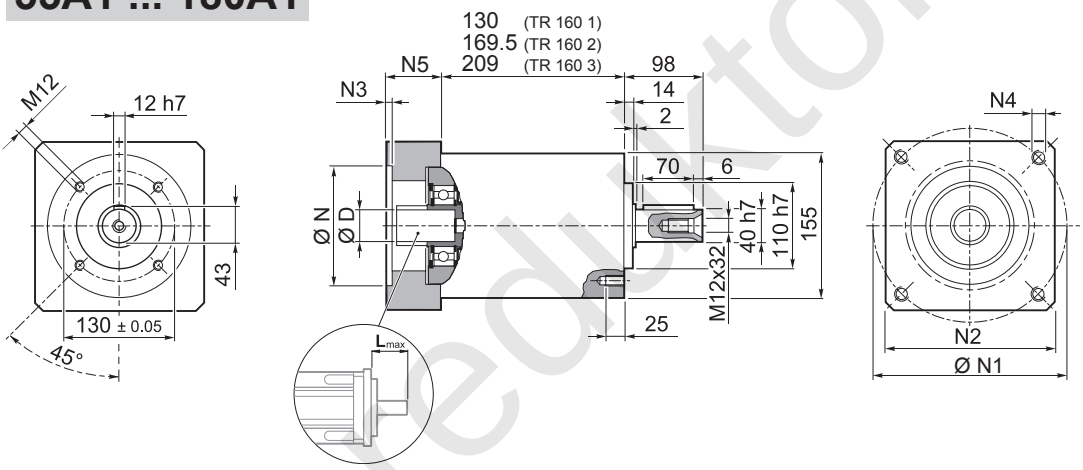

	Kg
TR 160 1	17.0
TR 160 2	21
TR 160 3	28

	D										N	N1	N2	N3	N4	N5	L_{max}
55A1	14	15.875	16	19	–	–	–	–	–	–	55.5	125.7	140	5	M6x15	39.5	50
80A2	14	15.875	16	19	–	–	–	–	–	–	80	100	140	5	M6x15	39.5	50
95A1	14	15.875	16	19	22	24	–	–	–	–	95	115	140	5	M8x20	39.5	50
110A1	14	15.875	16	19	22	24	–	–	–	–	110	130	140	5	M8x20	39.5	50
110B1	14	15.875	16	19	22	24	–	–	–	–	110	145	140	6.5	M8x20	49.5	60
114A	14	15.875	16	19	22	24	28	32	35	38	114.3	200	170	6.5	M12x25	69.5	80
130A	14	15.875	16	19	22	24	–	–	–	–	130	165	140	5	M10x20	39.5	50
130A1	14	15.875	16	19	22	24	28	32	–	–	130	165	140	5	M10x20	49.5	60
180A	14	15.875	16	19	22	24	28	32	–	–	180	215	190	6.5	M14x25	49.5	60
180A1	14	15.875	16	19	22	24	28	32	35	38	180	215	190	6.5	M14x25	69.5	80

Please contact us for different motor adapters and input shaft bore.

www.redukto-mex.ru

TR 160

FM

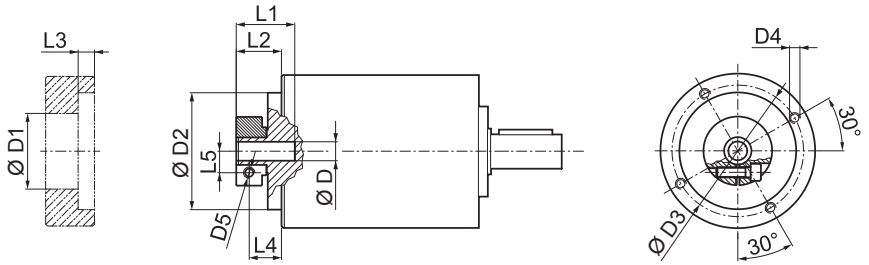

D			D1	D2	D3	D4	D5	L1	L2	L3	L4	L5
14	15.875	16	48	130	142.5	M8x16	M6	40	27.5	6	20	14.5
19			51	130	142.5	M8x16	M6	40	27.5	6	20	16.5
22	24		56.5	130	142.5	M8x16	M6	41	28.5	6	19.5	19
28			67	130	142.5	M8x16	M8	41	28.5	6	19.5	22.5
32			71	130	142.5	M8x16	M8	41	28.5	6	19.5	24.5
35			73	130	142.5	M8x16	M8	50	37.5	11.25	26	26
38			77.5	130	142.5	M8x16	M8	50	37.5	11.25	26	28

i	$M_{n\,2}$ [Nm]	$M_{a\,2}$ [Nm]	$M_{p\,2}$ [Nm]	n_1 [min⁻¹]	$n_{1\,max}$ [min⁻¹]	φ_S [arcmin]	φ_R [arcmin]	C_t [Nm/arcmin]	$R_{1\,max}$ [N]	$R_{2\,max}$ [N]	$A_{2\,max}$ [N]	η %	J_G [kgcm²] D 14 ... 19	22 - 24	28 - 32	35 - 38
TR 160 1_3	350	660	1200	1900	3000	5'	3'	90	1200	6500	7500	97	8.39	8.60	8.95	10.30
TR 160 1_4	500	750	1400	2200	3500	5'	3'	90	1200	6500	7500	97	4.68	4.89	5.24	6.59
TR 160 1_5	500	750	1400	2500	3500	5'	3'	90	1200	6500	7500	97	3.28	3.49	3.84	5.19
TR 160 1_6	500	750	1400	2500	3500	5'	3'	90	1200	6500	7500	97	1.32	1.53	1.88	3.23
TR 160 1_7	500	750	1400	3000	4000	5'	3'	90	1200	6500	7500	97	2.03	2.24	2.59	3.94
TR 160 1_10	350	660	1200	3000	4000	5'	3'	90	1200	6500	7500	97	1.33	1.53	1.88	3.24
TR 160 2_9	350	660	1200	1900	3000	5'	3'	83.5	1200	6500	7500	94	7.51	7.72	8.07	9.42
TR 160 2_12	700	950	1800	1900	3000	5'	3'	83.5	1200	6500	7500	94	7.10	7.30	7.65	9.01
TR 160 2_15	700	950	1800	1900	3000	5'	3'	83.5	1200	6500	7500	94	6.94	7.15	7.50	8.85
TR 160 2_16	700	950	1800	2200	3500	5'	3'	83.5	1200	6500	7500	94	3.95	4.16	4.51	5.86
TR 160 2_20	700	950	1800	2500	3500	5'	3'	83.5	1200	6500	7500	94	2.82	3.02	3.37	4.73
TR 160 2_25	700	950	1800	2500	3500	5'	3'	83.5	1200	6500	7500	94	2.76	2.97	3.32	4.67
TR 160 2_28	700	950	1800	3000	4000	5'	3'	83.5	1200	6500	7500	94	1.79	2.00	2.35	3.70
TR 160 2_30	350	660	1200	3000	4000	5'	3'	83.5	1200	6500	7500	94	1.25	1.46	1.81	3.16
TR 160 2_35	700	950	1800	3000	4000	5'	3'	83.5	1200	6500	7500	94	1.77	1.97	2.32	3.68
TR 160 2_36	500	750	1400	2500	3500	5'	3'	83.5	1200	6500	7500	94	1.06	1.27	1.62	2.97
TR 160 2_40	700	950	1800	3000	4000	5'	3'	83.5	1200	6500	7500	94	1.21	1.42	1.77	3.12
TR 160 2_50	700	950	1800	3000	4000	5'	3'	83.5	1200	6500	7500	94	1.20	1.40	1.75	3.11
TR 160 2_70	700	950	1800	3000	4000	5'	3'	83.5	1200	6500	7500	94	1.18	1.39	1.74	3.09
TR 160 2_100	350	660	1200	3000	4000	5'	3'	83.5	1200	6500	7500	94	1.18	1.38	1.73	3.09
TR 160 3_48	700	950	1800	2200	3500	7'	5'	60	1200	6500	7500	91	4.10	4.31	4.66	6.01
TR 160 3_64	700	950	1800	2200	3500	7'	5'	60	1200	6500	7500	91	3.90	4.11	4.46	5.81
TR 160 3_75	700	950	1800	2500	3500	7'	5'	60	1200	6500	7500	91	2.91	3.11	3.46	4.82
TR 160 3_80	700	950	1800	2200	3500	7'	5'	60	1200	6500	7500	91	3.90	4.11	4.46	5.81
TR 160 3_84	700	950	1800	3000	4000	7'	5'	60	1200	6500	7500	91	1.84	2.05	2.40	3.75
TR 160 3_90	350	660	1200	3000	4000	7'	5'	60	1200	6500	7500	91	1.24	1.45	1.80	3.15
TR 160 3_120	700	950	1800	3000	4000	7'	5'	60	1200	6500	7500	91	1.23	1.44	1.79	3.14
TR 160 3_125	700	950	1800	2500	3500	7'	5'	60	1200	6500	7500	91	2.74	2.95	3.30	4.65
TR 160 3_140	700	950	1800	3000	4000	7'	5'	60	1200	6500	7500	91	1.78	1.98	2.33	3.69
TR 160 3_150	700	950	1800	3000	4000	7'	5'	60	1200	6500	7500	91	1.23	1.44	1.79	3.14
TR 160 3_160	700	950	1800	3000	4000	7'	5'	60	1200	6500	7500	91	1.20	1.41	1.76	3.11
TR 160 3_175	700	950	1800	3000	4000	7'	5'	60	1200	6500	7500	91	1.76	1.96	2.31	3.67
TR 160 3_200	700	950	1800	3000	4000	7'	5'	60	1200	6500	7500	91	1.20	1.41	1.76	3.11
TR 160 3_210	700	950	1800	3000	4000	7'	5'	60	1200	6500	7500	91	1.23	1.44	1.79	3.14
TR 160 3_250	700	950	1800	3000	4000	7'	5'	60	1200	6500	7500	91	1.19	1.40	1.75	3.10
TR 160 3_280	700	950	1800	3000	4000	7'	5'	60	1200	6500	7500	91	1.18	1.39	1.74	3.09
TR 160 3_350	700	950	1800	3000	4000	7'	5'	60	1200	6500	7500	91	1.18	1.39	1.74	3.09
TR 160 3_400	700	950	1800	3000	4000	7'	5'	60	1200	6500	7500	91	1.18	1.38	1.73	3.09
TR 160 3_500	700	950	1800	3000	4000	7'	5'	60	1200	6500	7500	91	1.18	1.38	1.73	3.09
TR 160 3_700	700	950	1800	3000	4000	7'	5'	60	1200	6500	7500	91	1.18	1.38	1.73	3.09
TR 160 3_1000	350	660	1200	3000	4000	7'	5'	60	1200	6500	7500	91	1.18	1.38	1.73	3.09

TR

www.stokr-niex.ru

TR G 160

55A1 ... 180A1

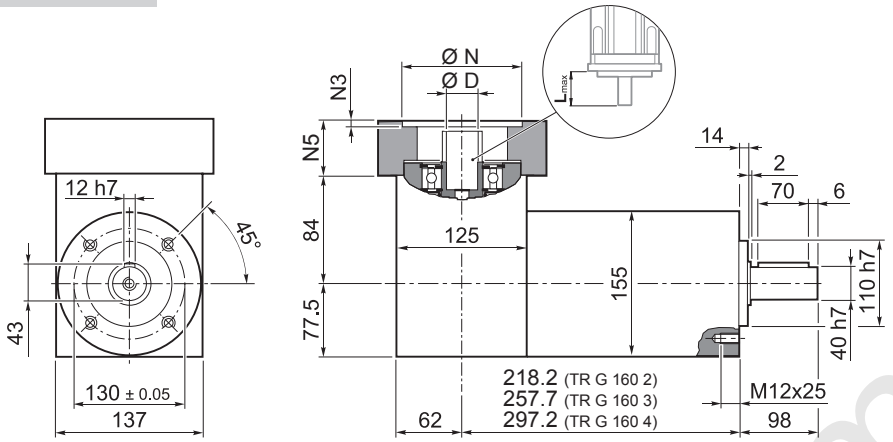

	Kg
TR G 160 2	24
TR G 160 3	28
TR G 160 4	34

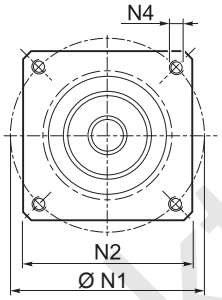

	D										N	N1	N2	N3	N4	N5	L_{max}
55A1	14	15.875	16	19	–	–	–	–	–	–	55.5	125.7	140	5	M6x15	39.5	50
80A2	14	15.875	16	19	–	–	–	–	–	–	80	100	140	5	M6x15	39.5	50
95A1	14	15.875	16	19	22	24	–	–	–	–	95	115	140	5	M8x20	39.5	50
110A1	14	15.875	16	19	22	24	–	–	–	–	110	130	140	5	M8x20	39.5	50
110B1	14	15.875	16	19	22	24	–	–	–	–	110	145	140	6.5	M8x20	49.5	60
114A	14	15.875	16	19	22	24	28	32	35	38	114.3	200	170	6.5	M12x25	69.5	80
130A	14	15.875	16	19	22	24	–	–	–	–	130	165	140	5	M10x20	39.5	50
130A1	14	15.875	16	19	22	24	28	32	–	–	130	165	140	5	M10x20	49.5	60
180A	14	15.875	16	19	22	24	28	32	–	–	180	215	190	6.5	M14x25	49.5	60
180A1	14	15.875	16	19	22	24	28	32	35	38	180	215	190	6.5	M14x25	69.5	80

Please contact us for different motor adapters and input shaft bore.

www.reduktor-mex.ru

TR G 160

FM

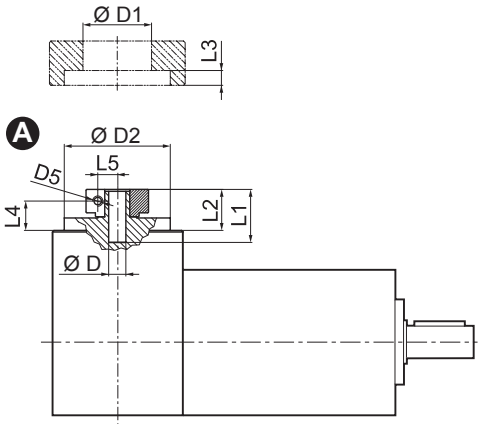

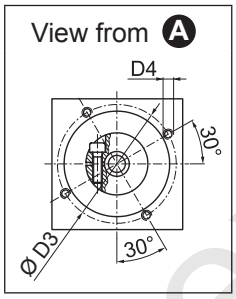

D			D1	D2	D3	D4	D5	L1	L2	L3	L4	L5
14	15.875	16	48	113	125.5	M8x15	M6	40	27.5	6	20	14.5
19			51	113	125.5	M8x15	M6	40	27.5	6	20	16.5
22	24		56.5	113	125.5	M8x15	M6	41	28.5	6	19.5	19
28			67	113	125.5	M8x15	M8	41	28.5	6	19.5	22.5
32			71	113	125.5	M8x15	M8	41	28.5	6	19.5	24.5
35			73	113	125.5	M8x15	M8	50	37.5	11.25	26	26
38			77.5	113	125.5	M8x15	M8	50	37.5	11.25	26	28

i	$M_{n\,2}$ [Nm]	$M_{a\,2}$ [Nm]	$M_{p\,2}$ [Nm]	n_1 [min^{-1}]	$n_{1\,max}$ [min^{-1}]	φ_S [arcmin]	φ_R [arcmin]	C_t [Nm/arcmin]	$R_{2\,max}$ [N]	$A_{2\,max}$ [N]	η %	J_G [kgcm^2] D 14 ... 19	22 - 24	28 - 32	35 - 38
TR G 160 2_3	350	660	1200	1900	3000	5'	3'	90	6500	7500	94	10.23	10.42	10.80	13.51
TR G 160 2_4	500	750	1400	2200	3500	5'	3'	90	6500	7500	94	6.52	6.71	7.09	9.80
TR G 160 2_5	500	750	1400	2500	3500	5'	3'	90	6500	7500	94	5.87	6.06	6.45	9.16
TR G 160 2_6	500	750	1400	2500	3500	5'	3'	90	6500	7500	94	4.58	4.77	5.16	7.86
TR G 160 2_7	500	750	1400	3000	4000	5'	3'	90	6500	7500	94	5.29	5.48	5.87	8.57
TR G 160 2_10	350	660	1200	3000	4000	5'	3'	90	6500	7500	94	4.97	5.16	5.54	8.25
TR G 160 3_9	350	660	1200	1900	3000	5'	3'	83.5	6500	7500	91	9.35	9.54	9.92	12.63
TR G 160 3_12	700	950	1800	1900	3000	5'	3'	83.5	6500	7500	91	8.78	8.97	9.36	12.07
TR G 160 3_15	700	950	1800	1900	3000	5'	3'	83.5	6500	7500	91	8.71	8.90	9.29	11.99
TR G 160 3_16	700	950	1800	2200	3500	5'	3'	83.5	6500	7500	91	5.79	5.98	6.36	9.07
TR G 160 3_20	700	950	1800	2500	3500	5'	3'	83.5	6500	7500	91	5.41	6.20	6.59	9.30
TR G 160 3_25	700	950	1800	2500	3500	5'	3'	83.5	6500	7500	91	5.95	5.54	5.93	8.64
TR G 160 3_28	700	950	1800	3000	4000	5'	3'	83.5	6500	7500	91	5.05	5.24	5.63	8.33
TR G 160 3_30	350	660	1200	3000	4000	5'	3'	83.5	6500	7500	91	4.89	5.09	5.47	8.18
TR G 160 3_35	700	950	1800	3000	4000	5'	3'	83.5	6500	7500	91	5.36	5.54	5.93	8.64
TR G 160 3_36	500	750	1400	2500	3500	5'	3'	83.5	6500	7500	91	4.32	4.51	4.90	7.60
TR G 160 3_40	700	950	1800	3000	4000	5'	3'	83.5	6500	7500	91	5.00	5.19	5.58	8.28
TR G 160 3_50	700	950	1800	3000	4000	5'	3'	83.5	6500	7500	91	4.99	5.18	5.56	8.27
TR G 160 3_70	700	950	1800	3000	4000	5'	3'	83.5	6500	7500	91	4.82	5.02	5.40	8.11
TR G 160 3_100	350	660	1200	3000	4000	5'	3'	83.5	6500	7500	91	4.82	5.01	5.39	8.10
TR G 160 4_48	700	950	1800	2200	3500	7'	5'	60	6500	7500	89	5.94	6.13	6.53	9.22
TR G 160 4_64	700	950	1800	2200	3500	7'	5'	60	6500	7500	89	5.74	5.93	6.31	9.02
TR G 160 4_75	700	950	1800	2500	3500	7'	5'	60	6500	7500	89	5.50	5.68	6.07	8.79
TR G 160 4_80	700	950	1800	2200	3500	7'	5'	60	6500	7500	89	5.74	5.93	6.31	9.02
TR G 160 4_84	700	950	1800	3000	4000	7'	5'	60	6500	7500	89	5.10	5.29	5.68	8.38
TR G 160 4_90	350	660	1200	3000	4000	7'	5'	60	6500	7500	89	4.88	5.08	5.46	8.17
TR G 160 4_120	700	950	1800	3000	4000	7'	5'	60	6500	7500	89	4.87	5.07	5.45	8.16
TR G 160 4_125	700	950	1800	2500	3500	7'	5'	60	6500	7500	89	5.33	5.52	5.91	8.62
TR G 160 4_140	700	950	1800	3000	4000	7'	5'	60	6500	7500	89	5.04	5.22	5.61	8.32
TR G 160 4_150	700	950	1800	3000	4000	7'	5'	60	6500	7500	89	4.87	5.07	5.45	8.16
TR G 160 4_160	700	950	1800	3000	4000	7'	5'	60	6500	7500	89	4.84	5.04	5.42	8.13
TR G 160 4_175	700	950	1800	3000	4000	7'	5'	60	6500	7500	89	5.02	5.20	5.59	8.30
TR G 160 4_200	700	950	1800	3000	4000	7'	5'	60	6500	7500	89	4.84	5.04	5.42	8.13
TR G 160 4_210	700	950	1800	3000	4000	7'	5'	60	6500	7500	89	4.87	5.07	5.45	8.16
TR G 160 4_250	700	950	1800	3000	4000	7'	5'	60	6500	7500	89	4.83	5.03	5.41	8.12
TR G 160 4_280	700	950	1800	3000	4000	7'	5'	60	6500	7500	89	4.82	5.02	5.40	8.11
TR G 160 4_350	700	950	1800	3000	4000	7'	5'	60	6500	7500	89	4.82	2.05	5.40	8.11
TR G 160 4_400	700	950	1800	3000	4000	7'	5'	60	6500	7500	89	4.82	5.01	5.39	8.11
TR G 160 4_500	700	950	1800	3000	4000	7'	5'	60	6500	7500	89	4.82	5.01	5.39	8.11
TR G 160 4_700	700	950	1800	3000	4000	7'	5'	60	6500	7500	89	4.82	5.01	5.39	8.11
TR G 160 4_1000	350	660	1200	3000	4000	7'	5'	60	6500	7500	89	4.82	5.01	5.39	8.11

www.nektor-mex.ru

TR MB 160

55A1 ... 180A1

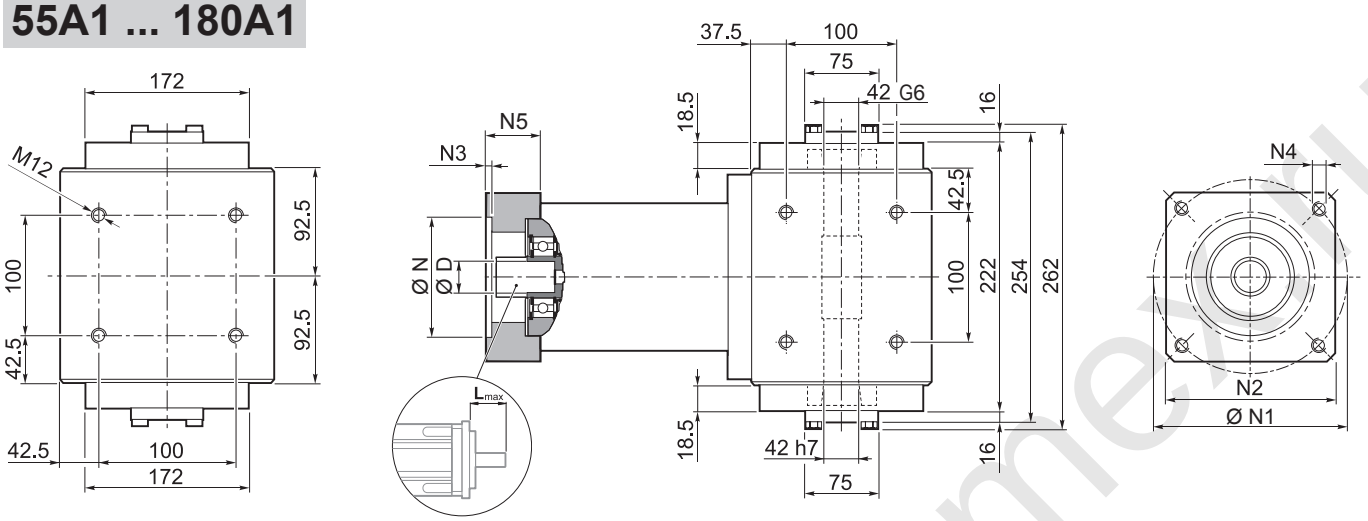

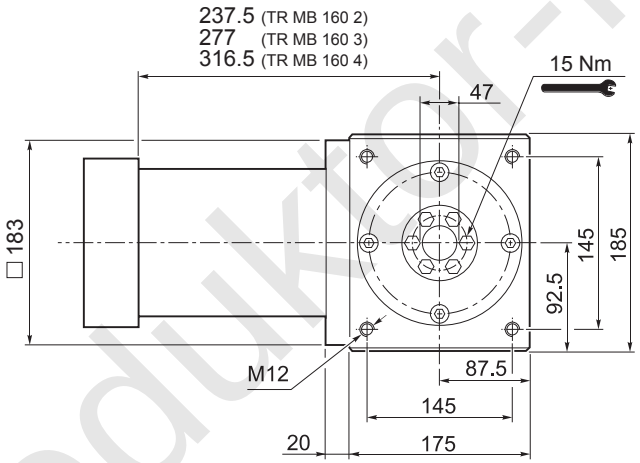

	Kg
TR MB 160 2	59
TR MB 160 3	63.5
TR MB 160 4	70.5

	D										N	N1	N2	N3	N4	N5	L_{max}
55A1	14	15.875	16	19	–	–	–	–	–	–	55.5	125.7	140	5	M6x15	39.5	50
80A2	14	15.875	16	19	–	–	–	–	–	–	80	100	140	5	M6x15	39.5	50
95A1	14	15.875	16	19	22	24	–	–	–	–	95	115	140	5	M8x20	39.5	50
110A1	14	15.875	16	19	22	24	–	–	–	–	110	130	140	5	M8x20	39.5	50
110B1	14	15.875	16	19	22	24	–	–	–	–	110	145	140	6.5	M8x20	49.5	60
114A	14	15.875	16	19	22	24	28	32	35	38	114.3	200	170	6.5	M12x25	69.5	80
130A	14	15.875	16	19	22	24	–	–	–	–	130	165	140	5	M10x20	39.5	50
130A1	14	15.875	16	19	22	24	28	32	–	–	130	165	140	5	M10x20	49.5	60
180A	14	15.875	16	19	22	24	28	32	–	–	180	215	190	6.5	M14x25	49.5	60
180A1	14	15.875	16	19	22	24	28	32	35	38	180	215	190	6.5	M14x25	69.5	80

Please contact us for different motor adapters and input shaft bore.

www.redukt or-mex.ru

TR MB 160

FM

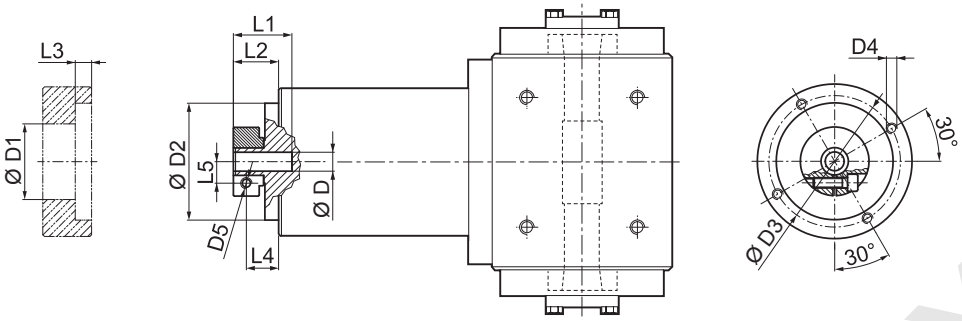

D	D1	D2	D3	D4	D5	L1	L2	L3	L4	L5
14 15.875 16	48	130	142.5	M8x16	M6	40	27.5	6	20	14.5
19	51	130	142.5	M8x16	M6	40	27.5	6	20	16.5
22 24	56.5	130	142.5	M8x16	M6	41	28.5	6	19.5	19
28	67	130	142.5	M8x16	M8	41	28.5	6	19.5	22.5
32	71	130	142.5	M8x16	M8	41	28.5	6	19.5	24.5
35	73	130	142.5	M8x16	M8	50	37.5	11.25	26	26
38	77.5	130	142.5	M8x16	M8	50	37.5	11.25	26	28

i	$M_{n\,2}$ [Nm]	$M_{a\,2}$ [Nm]	$M_{p\,2}$ [Nm]	n_1 [min⁻¹]	$n_{1\,max}$ [min⁻¹]	φ_S [arcmin]	φ_R [arcmin]	C_t [Nm/arcmin]	η %	J_G [kgcm²] D 14 ... 19	22 - 24	28 - 32	35 - 38
TR MB 160 2_3	350	660	1200	1900	3000	5'	3'	90	94	8.39	8.60	8.95	10.30
TR MB 160 2_4	500	750	1400	2200	3500	5'	3'	90	94	4.68	4.89	5.24	6.59
TR MB 160 2_5	500	750	1400	2500	3500	5'	3'	90	94	3.28	3.49	3.84	5.19
TR MB 160 2_6	500	750	1400	2500	3500	5'	3'	90	94	1.32	1.53	1.88	3.23
TR MB 160 2_7	500	750	1400	3000	4000	5'	3'	90	94	2.03	2.24	2.59	3.94
TR MB 160 2_10	350	660	1200	3000	4000	5'	3'	90	94	1.33	1.53	1.88	3.24
TR MB 160 3_9	350	660	1200	1900	3000	5'	3'	83	91	7.51	7.72	8.07	9.42
TR MB 160 3_12	700	950	1800	1900	3000	5'	3'	83	91	7.10	7.30	7.65	9.01
TR MB 160 3_15	700	950	1800	1900	3000	5'	3'	83	91	6.94	7.15	7.50	8.85
TR MB 160 3_16	700	950	1800	2200	3500	5'	3'	83	91	3.95	4.16	4.51	5.86
TR MB 160 3_20	700	950	1800	2500	3500	5'	3'	83	91	2.82	3.02	3.37	4.73
TR MB 160 3_25	700	950	1800	2500	3500	5'	3'	83	91	2.76	2.97	3.32	4.67
TR MB 160 3_28	700	950	1800	3000	4000	5'	3'	83	91	1.79	2.00	2.35	3.70
TR MB 160 3_30	350	660	1200	3000	4000	5'	3'	83	91	1.25	1.46	1.81	3.16
TR MB 160 3_35	700	950	1800	3000	4000	5'	3'	83	91	1.77	1.97	2.32	3.68
TR MB 160 3_36	500	750	1400	2500	3500	5'	3'	83	91	1.06	1.27	1.62	2.97
TR MB 160 3_40	700	950	1800	3000	4000	5'	3'	83	91	1.21	1.42	1.77	3.12
TR MB 160 3_50	700	950	1800	3000	4000	5'	3'	83	91	1.20	1.40	1.75	3.11
TR MB 160 3_70	700	950	1800	3000	4000	5'	3'	83	91	1.18	1.39	1.74	3.09
TR MB 160 3_100	350	660	1200	3000	4000	5'	3'	83	91	1.18	1.38	1.73	3.09
TR MB 160 4_48	700	950	1800	2200	3500	7'	5'	60	89	4.10	4.31	4.66	6.01
TR MB 160 4_64	700	950	1800	2200	3500	7'	5'	60	89	3.90	4.11	4.46	5.81
TR MB 160 4_75	700	950	1800	2500	3500	7'	5'	60	89	2.91	3.11	3.46	4.82
TR MB 160 4_80	700	950	1800	2200	3500	7'	5'	60	89	3.90	4.11	4.46	5.81
TR MB 160 4_84	700	950	1800	3000	4000	7'	5'	60	89	1.84	2.05	2.40	3.75
TR MB 160 4_90	350	660	1200	3000	4000	7'	5'	60	89	1.24	1.45	1.80	3.15
TR MB 160 4_120	700	950	1800	3000	4000	7'	5'	60	89	1.23	1.44	1.79	3.14
TR MB 160 4_125	700	950	1800	2500	3500	7'	5'	60	89	2.74	2.95	3.30	4.65
TR MB 160 4_140	700	950	1800	3000	4000	7'	5'	60	89	1.78	1.98	2.33	3.69
TR MB 160 4_150	700	950	1800	3000	4000	7'	5'	60	89	1.23	1.44	1.79	3.14
TR MB 160 4_160	700	950	1800	3000	4000	7'	5'	60	89	1.20	1.41	1.76	3.11
TR MB 160 4_175	700	950	1800	3000	4000	7'	5'	60	89	1.76	1.96	2.31	3.67
TR MB 160 4_200	700	950	1800	3000	4000	7'	5'	60	89	1.20	1.41	1.76	3.11
TR MB 160 4_210	700	950	1800	3000	4000	7'	5'	60	89	1.23	1.44	1.79	3.14
TR MB 160 4_250	700	950	1800	3000	4000	7'	5'	60	89	1.19	1.40	1.75	3.10
TR MB 160 4_280	700	950	1800	3000	4000	7'	5'	60	89	1.18	1.39	1.74	3.09
TR MB 160 4_350	700	950	1800	3000	4000	7'	5'	60	89	1.18	1.39	1.74	3.09
TR MB 160 4_400	700	950	1800	3000	4000	7'	5'	60	89	1.18	1.38	1.73	3.09
TR MB 160 4_500	700	950	1800	3000	4000	7'	5'	60	89	1.18	1.38	1.73	3.09
TR MB 160 4_700	700	950	1800	3000	4000	7'	5'	60	89	1.18	1.38	1.73	3.09
TR MB 160 4_1000	350	660	1200	3000	4000	7'	5'	60	89	1.18	1.38	1.73	3.09

www.realmotor-mex.ru

TR 190

55A1 ... 180A1

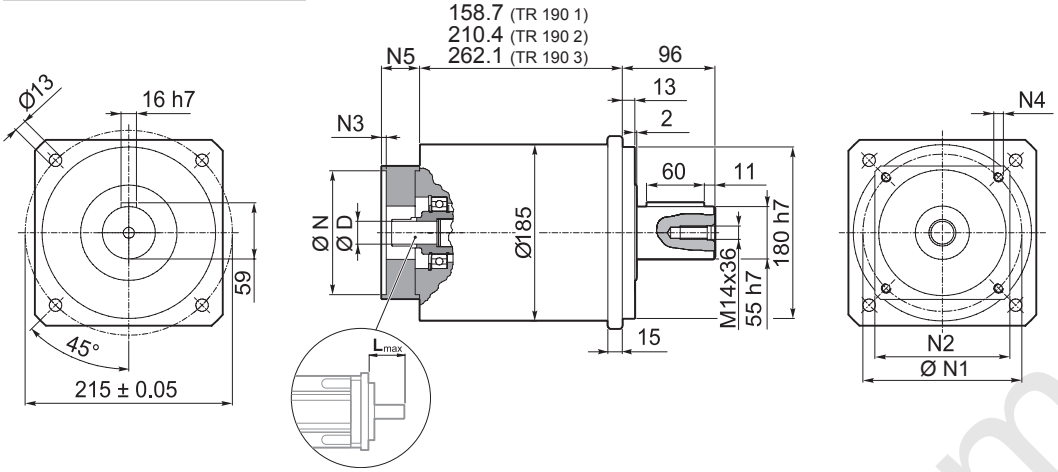

	Kg
TR 190 1	25
TR 190 2	29
TR 190 3	34

	D												N	N1	N2	N3	N4	N5	L_{max}
55A1	14	16	19	–	–	–	–	–	–	–	–	–	55.5	125.7	140	5	M6x15	39.5	50
80A2	14	16	19	–	–	–				–	–	–	80	100	140	5	M6x15	39.5	50
95A1	14	16	19	22	24	–	–	–	–	–	–	–	95	115	140	5	M8x20	39.5	50
110A1	14	16	19	22	24	–	–	–	–	–	–	–	110	130	140	5	M8x20	39.5	50
110B1	14	16	19	22	24	–	–	–	–	–	–	–	110	145	140	6.5	M8x20	49.5	60
114A	14	16	19	22	24	28	32	35	38	42	45	48	114.3	200	170	6.5	M12x25	69.5	80
130A	14	16	19	22	24	–	–	–	–	–	–	–	130	165	140	5	M10x20	39.5	50
130A1	14	16	19	22	24	28	32	–	–	–	–	–	130	165	140	5	M10x20	49.5	60
180A	14	16	19	22	24	28	32	–	–	–	–	–	180	215	190	6.5	M14x25	49.5	60
180A1	14	16	19	22	24	28	32	35	38	42	45	48	180	215	190	6.5	M14x25	69.5	80

Please contact us for different motor adapters and input shaft bore.

FM

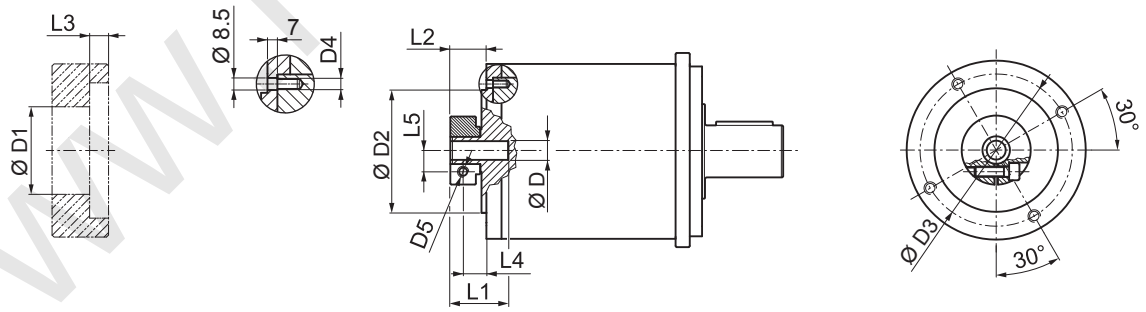

D		D1	D2	D3	D4	D5	L1	L2	L3	L4	L5
14	16	48	130	142.5	M8x14	M6	45.5	27.5	6	20	14.5
19		51	130	142.5	M8x14	M6	45.5	27.5	6	20	16.5
22	24	56.5	130	142.5	M8x14	M6	47	29	6	20	19
28		67	130	142.5	M8x14	M8	47	29	6	20	22.5
32		71	130	142.5	M8x14	M8	47	29	6	20	24.5
35		73	130	142.5	M8x14	M8	54.5	36.5	6	25	26
38		77.5	130	142.5	M8x14	M8	54.5	36.5	6	25	28
42		92	130	142.5	M8x14	M10	60.5	40	6	25	33
45		95	130	142.5	M8x14	M10	60.5	40	6	25	33
48		97	130	142.5	M8x14	M10	60.5	40	6	25	33

www.redukt-or-mex.ru

TR 190

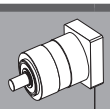 i	$M_{n\,2}$ [Nm]	$M_{a\,2}$ [Nm]	$M_{p\,2}$ [Nm]	n_1 [min⁻¹]	$n_{1\,max}$ [min⁻¹]	φ_S [arcmin]	φ_R [arcmin]	C_t [Nm/arcmin]	$R_{2\,max}$ [N]	$A_{2\,max}$ [N]	η %	J_G [kgcm²] D 14 ... 24	28 - 32	35 - 35	42	45 - 48
TR 190 1_3	500	800	1400	1500	2500	5'	3'	130	14000	15000	97	24.20	24.88	25.65	29.30	29.90
TR 190 1_4	700	950	1800	2100	3000	5'	3'	130	14000	15000	97	13.41	14.09	14.85	18.51	19.11
TR 190 1_5	700	950	1800	2300	3000	5'	3'	130	14000	15000	97	9.32	10.00	10.77	14.42	15.02
TR 190 1_6	700	950	1800	2300	3000	5'	3'	130	14000	15000	97	2.88	3.56	4.33	7.98	8.58
TR 190 1_7	700	950	1800	2900	3500	5'	3'	130	14000	15000	97	5.68	6.36	7.13	10.78	11.38
TR 190 1_10	500	800	1400	2900	3500	5'	3'	130	14000	15000	97	3.57	4.25	5.02	8.67	9.27
TR 190 2_9	500	800	1400	1500	2500	5'	3'	100	14000	15000	94	23.23	23.91	24.67	28.33	28.93
TR 190 2_12	1000	1200	2200	1500	2500	5'	3'	100	14000	15000	94	22.03	22.71	23.48	27.13	27.73
TR 190 2_15	1000	1200	2200	1500	2500	5'	3'	100	14000	15000	94	21.58	22.25	23.02	26.68	27.27
TR 190 2_16	1000	1200	2200	2100	3000	5'	3'	100	14000	15000	94	12.19	12.86	13.63	17.29	17.89
TR 190 2_20	1000	1200	2200	2300	3000	5'	3'	100	14000	15000	94	8.54	9.22	9.98	13.64	14.24
TR 190 2_25	1000	1200	2200	2300	3000	5'	3'	100	14000	15000	94	8.37	9.05	9.82	13.48	14.07
TR 190 2_28	1000	1200	2200	2900	3500	5'	3'	100	14000	15000	94	5.28	5.96	6.73	10.38	10.98
TR 190 2_30	500	800	1400	2900	3500	5'	3'	100	14000	15000	94	3.48	4.16	4.93	8.58	9.18
TR 190 2_35	1000	1200	2200	2900	3500	5'	3'	100	14000	15000	94	5.20	5.87	6.64	10.30	10.90
TR 190 2_36	700	950	1800	2300	3000	5'	3'	100	14000	15000	94	2.18	2.86	3.63	7.28	7.88
TR 190 2_40	1000	1200	2200	2900	3500	5'	3'	100	14000	15000	94	3.37	4.05	4.82	8.48	9.07
TR 190 2_50	1000	1200	2200	2900	3500	5'	3'	100	14000	15000	94	3.33	4.01	4.78	8.44	9.03
TR 190 2_70	1000	1200	2200	2900	3500	5'	3'	100	14000	15000	94	3.30	3.97	4.74	8.40	9.00
TR 190 2_100	500	800	1400	2900	3500	5'	3'	100	14000	15000	94	3.28	3.95	4.72	8.38	8.98
TR 190 3_48	1000	1200	2200	2100	3000	7'	5'	90	14000	15000	91	12.73	13.40	14.17	17.83	18.43
TR 190 3_64	1000	1200	2200	2100	3000	7'	5'	90	14000	15000	91	12.10	12.78	13.55	17.21	17.80
TR 190 3_75	1000	1200	2200	2300	3000	7'	5'	90	14000	15000	91	8.86	9.54	10.31	13.97	14.56
TR 190 3_80	1000	1200	2200	2100	3000	7'	5'	90	14000	15000	91	12.09	12.76	13.53	17.19	17.79
TR 190 3_84	1000	1200	2200	2900	3500	7'	5'	90	14000	15000	91	5.46	6.13	6.90	10.56	11.16
TR 190 3_90	500	800	1400	2900	3500	7'	5'	90	14000	15000	91	3.47	4.15	4.92	8.57	9.17
TR 190 3_120	1000	1200	2200	2900	3500	7'	5'	90	14000	15000	91	3.46	4.14	4.91	8.56	9.16
TR 190 3_125	1000	1200	2200	2300	3000	7'	5'	90	14000	15000	91	8.34	9.01	9.78	13.44	14.04
TR 190 3_140	1000	1200	2200	2900	3500	7'	5'	90	14000	15000	91	5.25	5.92	6.69	10.35	10.95
TR 190 3_150	1000	1200	2200	2900	3500	7'	5'	90	14000	15000	91	3.46	4.13	4.90	8.56	9.15
TR 190 3_160	1000	1200	2200	2900	3500	7'	5'	90	14000	15000	91	3.36	4.04	4.81	8.46	9.06
TR 190 3_175	1000	1200	2200	2900	3500	7'	5'	90	14000	15000	91	5.18	5.85	6.62	10.28	10.88
TR 190 3_200	1000	1200	2200	2900	3500	7'	5'	90	14000	15000	91	3.36	4.03	4.80	8.46	9.06
TR 190 3_210	1000	1200	2200	2900	3500	7'	5'	90	14000	15000	91	3.45	4.13	4.90	8.55	9.15
TR 190 3_250	1000	1200	2200	2900	3500	7'	5'	90	14000	15000	91	3.32	4.00	4.77	8.42	9.02
TR 190 3_280	1000	1200	2200	2900	3500	7'	5'	90	14000	15000	91	3.29	3.97	4.74	8.39	8.99
TR 190 3_350	1000	1200	2200	2900	3500	7'	5'	90	14000	15000	91	3.29	3.97	4.74	8.39	8.99
TR 190 3_400	1000	1200	2200	2900	3500	7'	5'	90	14000	15000	91	3.27	3.95	4.72	8.38	8.97
TR 190 3_500	1000	1200	2200	2900	3500	7'	5'	90	14000	15000	91	3.27	3.95	4.72	8.38	8.97
TR 190 3_700	1000	1200	2200	2900	3500	7'	5'	90	14000	15000	91	3.27	3.95	4.72	8.38	8.97
TR 190 3_1000	500	800	1400	2900	3500	7'	5'	90	14000	15000	91	3.27	3.95	4.72	8.38	8.97

TR

www.redukton-mex.ru

5.3.1 MACHINE SHAFT

Shaft of driven equipment should be made from high grade alloy steel. Table below shows recommended dimensions for the Customer to consider when designing mating shaft. A device retaining the shaft axially is also recommended (not shown).
The number and size of relative tapped holes at shaft end depend on application requirements.

MB

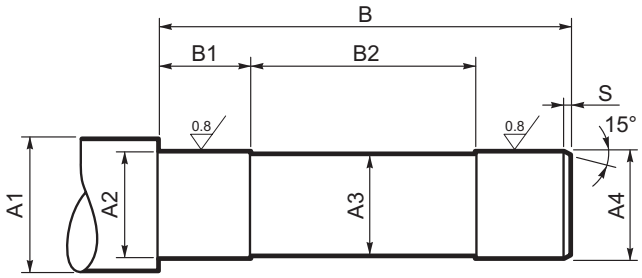

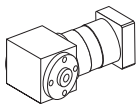	A1	A2	A3	A4	B	B1	B2	S
TR MB 080	≥ 25	20 h7	18	20 h7	178	50	90	
TR MB 105	≥ 40	32 h7	30	32 h7	205	60	115	1
TR MB 130/160	≥ 50	42 h7	40	42 h7	259	70	140	

www.redukt0r-mex.ru