11.2 DIMENSIONS AND TECHNICAL SPECIFICATIONS

LCK 050

25AH ... 80A

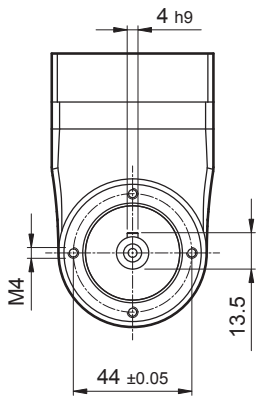

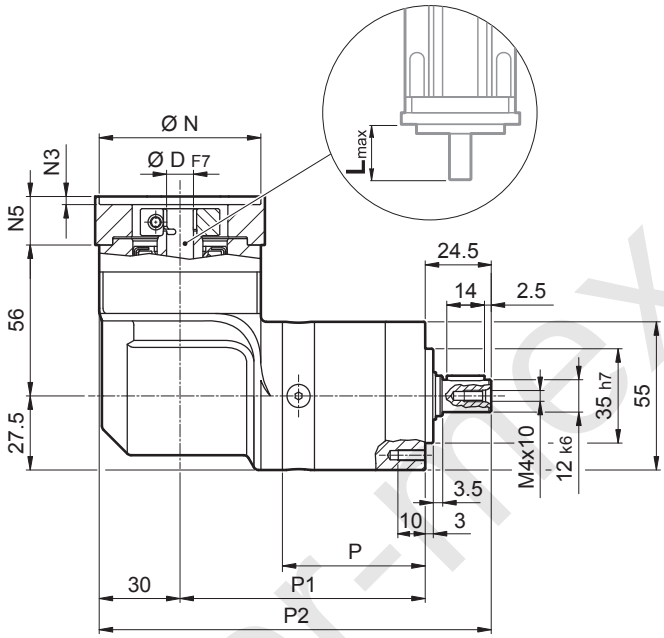

	P	P1	P2	Kg
LCK 050 2	53	91	145.5	1.6
LCK 050 3	66.8	104.8	159.3	1.8

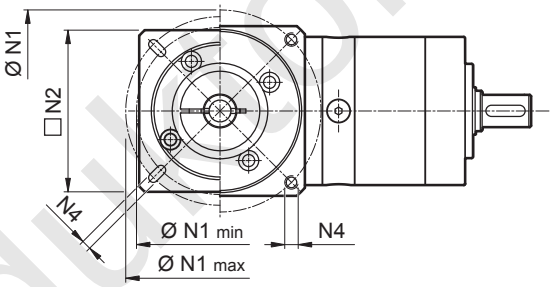

	D											N	N1 min	N1 max	N2	N3	N4	N5	L_{max}
25AH	6	6.35	7	8	9	9.52	–	–	–	–	–	25	39	56					
26AH	6	6.35	7	8	9	9.52	–	–	–	–	–	26	39	56					
28AH	6	6.35	7	8	9	9.52	–	–	–	–	–	28	39	56					
30AH	6	6.35	7	8	9	9.52	–	–	–	–	–	30	39	56					
32AH	6	6.35	7	8	9	9.52	–	–	–	–	–	32	39	56	65	3.5	4.5	25	25
34AH	6	6.35	7	8	9	9.52	–	–	–	–	–	34	40	56					
36AH	6	6.35	7	8	9	9.52	–	–	–	–	–	36	42	56					
38AH	6	6.35	7	8	9	9.52	–	–	–	–	–	39	45	56					
40AH	6	6.35	7	8	9	9.52	–	–	–	–	–	40	46	56					
38B	6	6.35	7	8	9	9.52	10	11	12	12.7	–	38.1	66.6		60	3	M4x10	18	25
40B	6	6.35	7	8	9	9.52	10	11	12	12.7	–	40	63		60	3	M4x10	18	25
50A	6	6.35	7	8	9	9.52	10	11	12	12.7	–	50	60		60	3	M4x10	18	25
50B	6	6.35	7	8	9	9.52	10	11	12	12.7	14	50	65		60	3	M5x12	23	30
50BH	6	6.35	7	8	9	9.52	10	11	12	12.7	14	50	65		65	3	5.5	25	32
50C	6	6.35	7	8	9	9.52	10	11	12	12.7	14	50	70		60	3	M4x10	23	30
50MH	6	6.35	7	8	9	9.52	10	11	12	12.7	–	55	80		65	2	5.5	16	23
60A	6	6.35	7	8	9	9.52	10	11	12	12.7	–	60	75		65	3	M5x12	18	25
60A1	6	6.35	7	8	9	9.52	10	11	12	12.7	14	60	75		65	3	M5x12	23	30
60B	6	6.35	7	8	9	9.52	10	11	12	12.7	14	60	85		75	3	M5x12	23	30
60C	6	6.35	7	8	9	9.52	10	11	12	12.7	14	60	90		75	3	M5x12	23	30
70A	6	6.35	7	8	9	9.52	10	11	12	12.7	14	70	85		75	3	M6x15	23	30
70B	6	6.35	7	8	9	9.52	10	11	12	12.7	14	70	90		75	5	M5x12	23	30
73A	6	6.35	7	8	9	9.52	10	11	12	12.7	14	73	98.4		85	3	M5x12	25	32
80A	6	6.35	7	8	9	9.52	10	11	12	12.7	14	80	100		85	3	M6x15	23	30

Please contact us for different motor adapters and input shaft bore.

www.reducteur-index.ru

LCK 050

FM

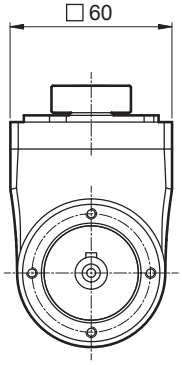

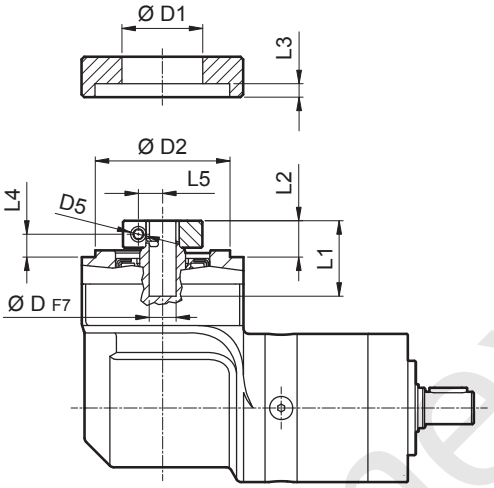

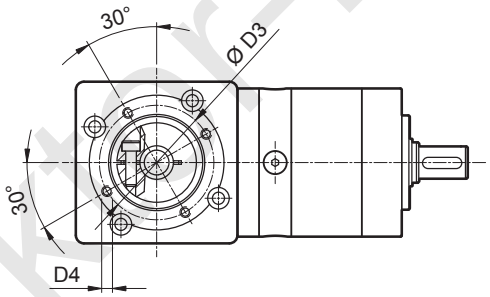

D				D1	D2	D3	D4	D5	L1	L2	L3	L4	L5
6	6.35	7		32.5	50	42.5	M4x8	M4	28	13.5	3	8.5	8
8	9	9.52	10	32.5	50	42.5	M4x8	M4	28	13.5	3	8.5	9
11	12	12.7		35.5	50	42.5	M4x8	M4	23	13.5	3	8.5	11
14				35.5	50	42.5	M4x8	M4	25	15.5	3	8.9	11.5

i	$M_{n\,2}$ [Nm]	$M_{a\,2}$ [Nm]	$M_{p\,2}$ [Nm]	n_1 [min^{-1}]	$n_{1\,max}$ [min^{-1}]	φ_S [arcmin]	C_t [Nm/arcmin]	$R_{2\,max}$ [N]	$A_{2\,max}$ [N]	η %	J_G [kgcm^2] D 6 ... 9.52	J_G [kgcm^2] D 10 ... 14
LCK 050 2_6	10	16	28	2500	5000	6'	0.9	500	600	94	0.23	0.25
LCK 050 2_8	12	20	30	2500	5000	6'	0.9	500	600	94	0.23	0.24
LCK 050 2_10	12	20	30	2500	5000	6'	0.9	500	600	94	0.23	0.24
LCK 050 2_14	12	20	30	2500	5000	6'	0.9	500	600	94	0.23	0.24
LCK 050 3_24	12	20	30	2500	5000	8'	0.7	500	600	91	0.23	0.25
LCK 050 3_30	12	20	30	2500	5000	8'	0.7	500	600	91	0.23	0.25
LCK 050 3_50	12	20	30	2500	5000	8'	0.7	500	600	91	0.23	0.24
LCK 050 3_70	12	20	30	2500	5000	8'	0.7	500	600	91	0.23	0.24
LCK 050 3_90	12	20	30	2500	5000	8'	0.7	500	600	91	0.22	0.24

www.redukter-mex.ru

LCK 070

25AH ... 80A

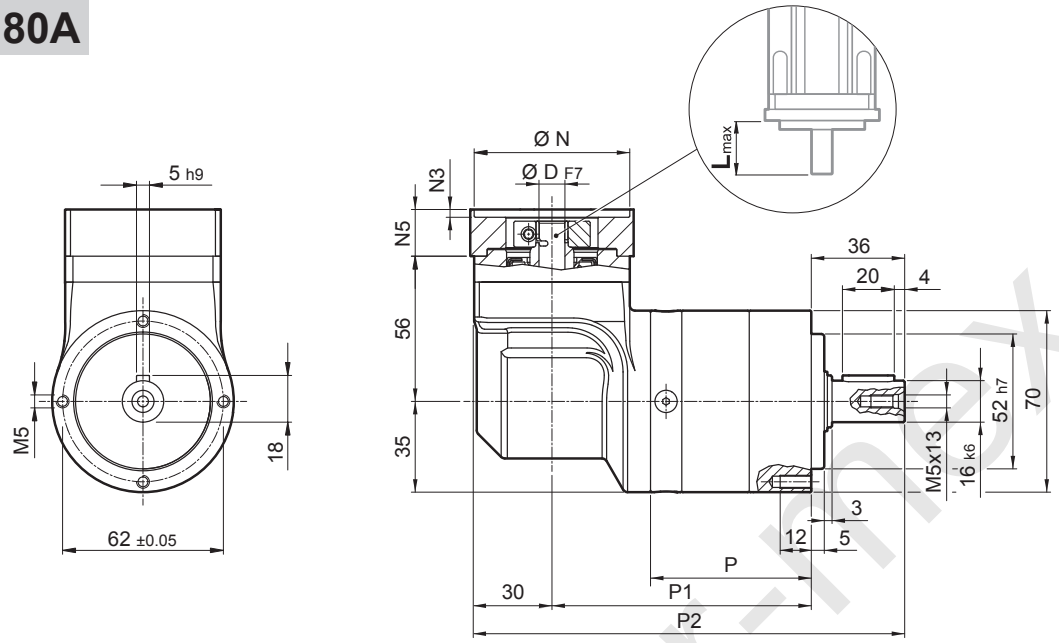

	P	P1	P2	Kg
LCK 070 2	62	100	166	2.7
LCK 070 3	78.7	116.7	182.7	3.0

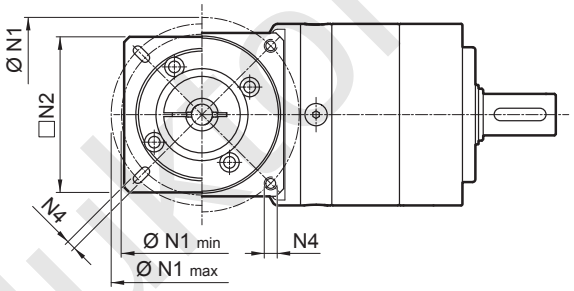

	D											N	N1 min	N1 max	N2	N3	N4	N5	L_{max}
25AH	6	6.35	7	8	9	9.52	–	–	–	–	–	25	39	56					
26AH	6	6.35	7	8	9	9.52	–	–	–	–	–	26	39	56					
28AH	6	6.35	7	8	9	9.52	–	–	–	–	–	28	39	56					
30AH	6	6.35	7	8	9	9.52	–	–	–	–	–	30	39	56					
32AH	6	6.35	7	8	9	9.52	–	–	–	–	–	32	39	56	65	3.5	4.5	25	25
34AH	6	6.35	7	8	9	9.52	–	–	–	–	–	34	40	56					
36AH	6	6.35	7	8	9	9.52	–	–	–	–	–	36	42	56					
39AH	6	6.35	7	8	9	9.52	–	–	–	–	–	39	45	56					
40AH	6	6.35	7	8	9	9.52	–	–	–	–	–	40	46	56					
38B	6	6.35	7	8	9	9.52	10	11	12	12.7	–	38.1	66.6		60	3	M4x10	18	25
40B	6	6.35	7	8	9	9.52	10	11	12	12.7	–	40	63		60	3	M4x10	18	25
50A	6	6.35	7	8	9	9.52	10	11	12	12.7	–	50	60		60	3	M4x10	18	25
50B	6	6.35	7	8	9	9.52	10	11	12	12.7	14	50	65		60	3	M5x12	23	30
50BH	6	6.35	7	8	9	9.52	10	11	12	12.7	14	50	65		65	3	5.5	25	32
50C	6	6.35	7	8	9	9.52	10	11	12	12.7	14	50	70		60	3	M4x10	23	30
55MH	6	6.35	7	8	9	9.52	10	11	12	12.7	–	55	80		65	2	5.5	16	23
60A	6	6.35	7	8	9	9.52	10	11	12	12.7	–	60	75		65	3	M5x12	18	25
60A1	6	6.35	7	8	9	9.52	10	11	12	12.7	14	60	75		65	3	M5x12	23	30
60B	6	6.35	7	8	9	9.52	10	11	12	12.7	14	60	85		75	3	M5x12	23	30
60C	6	6.35	7	8	9	9.52	10	11	12	12.7	14	60	90		75	3	M5x12	23	30
70A	6	6.35	7	8	9	9.52	10	11	12	12.7	14	70	85		75	3	M6x15	23	30
70B	6	6.35	7	8	9	9.52	10	11	12	12.7	14	70	90		75	5	M5x12	23	30
73A	6	6.35	7	8	9	9.52	10	11	12	12.7	14	73	98.4		85	3	M5x12	25	32
80A	6	6.35	7	8	9	9.52	10	11	12	12.7	14	80	100		85	3	M6x15	23	30

Please contact us for different motor adapters and input shaft bore.

www.redukor-mex.ru

LCK 070

FM

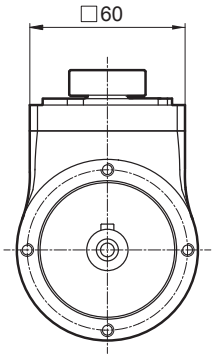

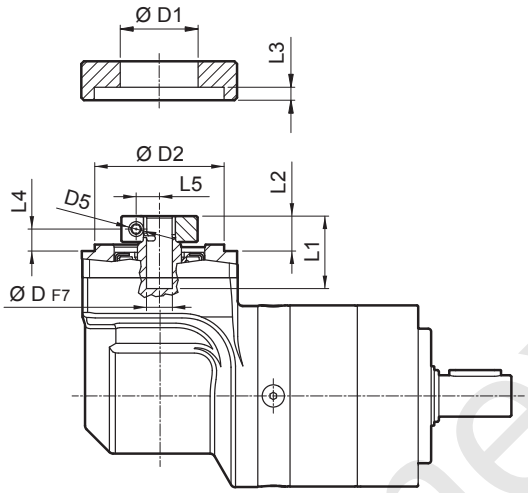

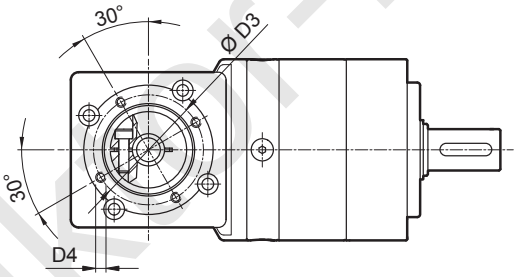

D				D1	D2	D3	D4	D5	L1	L2	L3	L4	L5
6	6.35	7		32.5	50	42.5	M4x8	M4	28	13.5	3	8.5	8
8	9	9.52	10	32.5	50	42.5	M4x8	M4	28	13.5	3	8.5	9
11	12	12.7		35.5	50	42.5	M4x8	M4	23	13.5	3	8.5	11
14				35.5	50	42.5	M4x8	M4	25	15.5	3	8.9	11.5

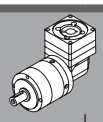 i	$M_{n\,2}$ [Nm]	$M_{a\,2}$ [Nm]	$M_{p\,2}$ [Nm]	n_1 [min^{-1}]	$n_{1\,max}$ [min^{-1}]	φ_S [arcmin]	C_t [Nm/arcmin]	$R_{2\,max}$ [N]	$A_{2\,max}$ [N]	η %	J_G [kgcm^2] D 6 ... 9.52	10 ... 14
LCK 070 2_6	18	30	45	2500	5000	6'	2.8	1300	1400	94	0.25	0.26
LCK 070 2_8	25	35	60	2500	5000	6'	2.8	1300	1400	94	0.24	0.25
LCK 070 2_10	25	35	70	2500	5000	6'	2.8	1300	1400	94	0.23	0.25
LCK 070 2_14	25	35	70	2500	5000	6'	2.8	1300	1400	94	0.23	0.24
LCK 070 2_20	18	30	60	2500	5000	6'	2.8	1300	1400	94	0.23	0.24
LCK 070 3_24	25	35	70	2500	5000	8'	2.5	1300	1400	91	0.24	0.26
LCK 070 3_30	25	35	70	2500	5000	8'	2.5	1300	1400	91	0.24	0.26
LCK 070 3_50	25	35	70	2500	5000	8'	2.5	1300	1400	91	0.23	0.24
LCK 070 3_70	25	35	70	2500	5000	8'	2.5	1300	1400	91	0.23	0.24
LCK 070 3_80	25	35	70	2500	5000	8'	2.5	1300	1400	91	0.23	0.24
LCK 070 3_100	25	35	70	2500	5000	8'	2.5	1300	1400	91	0.23	0.24

www.redukor-mex.ru

LCK 090

40B1 ... 110B1

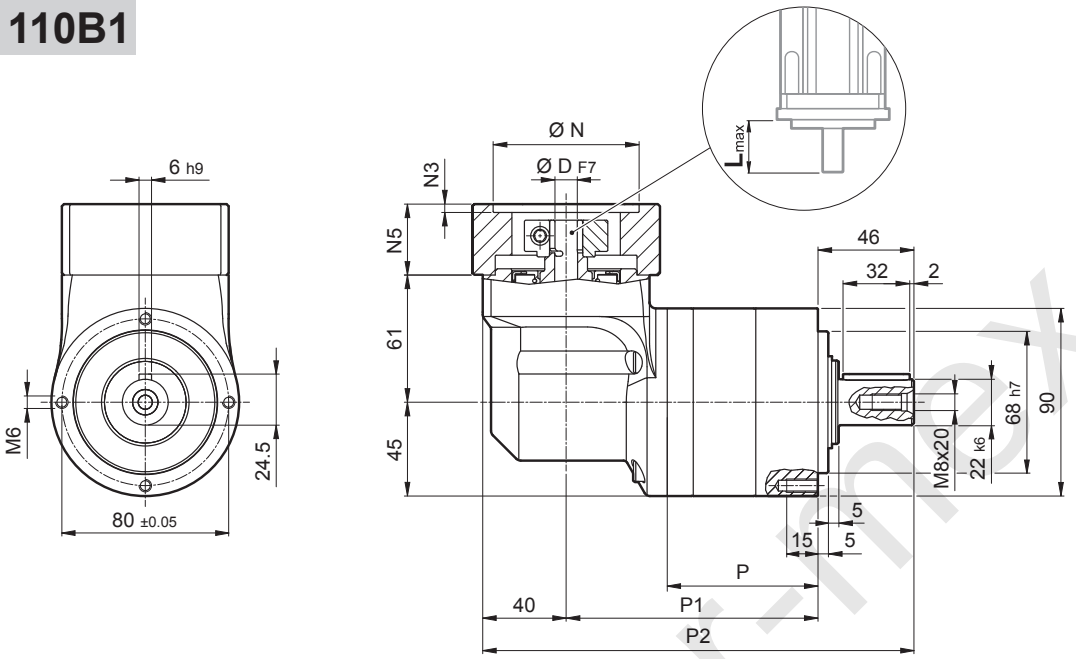

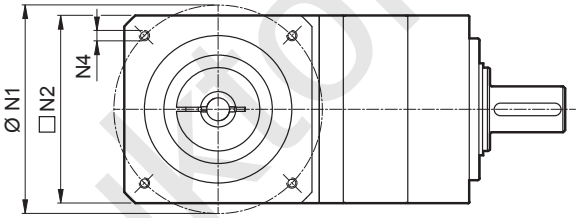

	P	P1	P2	Kg
LCK 090 2	72.3	120.8	206.8	5.2
LCK 090 3	98.8	147.3	233.3	6.3

	D												N	N1	N2	N3	N4	N5	L_{max}
40B1	8	9	9.52	11	12	12.7	14	–	–	–	–	–	40	63	80	4	M4x10	34	40
45A	8	9	9.52	11	12	12.7	–	–	–	–	–	–	45	63	80	4	M4x10	34	40
50B1	8	9	9.52	11	12	12.7	14	–	–	–	–	–	50	65	80	4	M5x16	34	40
50BH1	8	9	9.52	11	12	12.7	14	–	–	–	–	–	50	65	80	4	5.5	34	40
50C1	8	9	9.52	11	12	12.7	14	–	–	–	–	–	50	70	80	4	M4x10	34	40
50D	8	9	9.52	11	12	12.7	14	–	–	–	–	–	50	95	80	4	M6x10	34	40
55A	8	9	9.52	11	12	12.7	14	15.875	16	17	19	19.05	55.5	125.7	105	4	M6x16	34	40
60A2	8	9	9.52	11	12	12.7	14	–	–	–	–	–	60	75	80	4	M5x16	34	40
60AH2	8	9	9.52	11	12	12.7	14	–	–	–	–	–	60	75	90	4	5.5	34	40
60B1	8	9	9.52	11	12	12.7	14	15.875	16	–	–	–	60	85	80	4	M5x16	34	40
60C1	8	9	9.52	11	12	12.7	14	15.875	16	–	–	–	60	90	80	4	M5x16	34	40
70A1	8	9	9.52	11	12	12.7	14	15.875	16	17	19	19.05	70	85	80	4	M6x20	34	40
70AH1	8	9	9.52	11	12	12.7	14	15.875	16	17	19	19.05	70	85	90	4	6.5	34	40
70B1	8	9	9.52	11	12	12.7	14	15.875	16	17	19	19.05	70	90	80	4	M5x16	34	40
73A1	8	9	9.52	11	12	12.7	14	–	–	–	–	–	73	98.4	85	4	M5x16	34	40
80A1	8	9	9.52	11	12	12.7	14	15.875	16	17	19	19.05	80	100	90	4	M6x16	34	40
95A	8	9	9.52	11	12	12.7	14	15.875	16	17	19	19.05	95	115	100	4	M8x20	34	40
95B	8	9	9.52	11	12	12.7	14	15.875	16	17	19	19.05	95	130	115	4	M8x20	34	40
110A	8	9	9.52	11	12	12.7	14	15.875	16	17	19	19.05	110	130	115	4	M8x20	34	40
110B	8	9	9.52	11	12	12.7	14	15.875	16	17	19	19.05	110	145	120	6.5	M8x20	44	50
110B1	8	9	9.52	11	12	12.7	14	15.875	16	17	19	19.05	110	145	120	6.5	M8x20	54	60

Please contact us for different motor adapters and input shaft bore.

www.reducteur-index.ru

LCK 090

FM

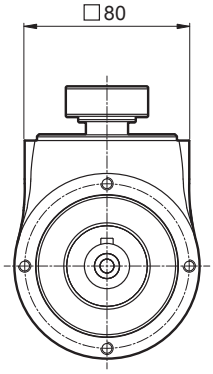

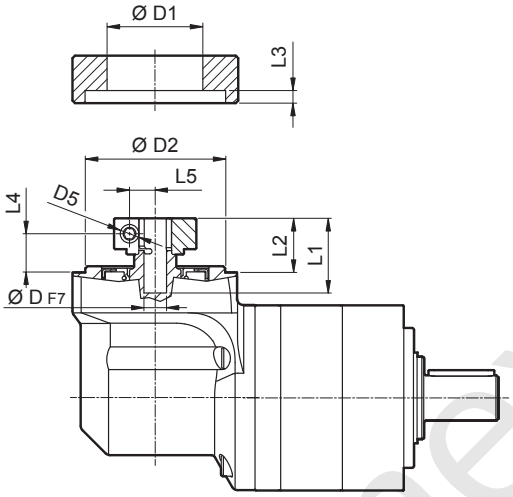

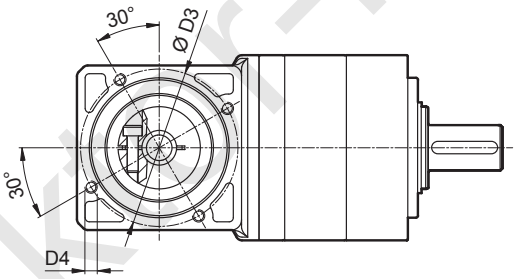

D				D1	D2	D3	D4	D5	L1	L2	L3	L4	L5
8	9	9.52		38	68	76.5	M6x10	M6	36.3	26.3	9.5	18.8	10.5
11	12	12.7		43	68	76.5	M6x10	M6	36.3	26.3	9.5	18.8	12.5
14	15.875	16	17	48	68	76.5	M6x10	M6	36.3	26.3	9.5	18.8	14.5
19	19.05			51	68	76.5	M6x10	M6	36.3	26.3	9.5	18.8	16.5

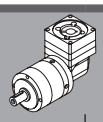 i	$M_{n\,2}$ [Nm]	$M_{a\,2}$ [Nm]	$M_{p\,2}$ [Nm]	n_1 [min^{-1}]	$n_{1\,max}$ [min^{-1}]	φ_S [arcmin]	C_t [Nm/arcmin]	$R_{2\,max}$ [N]	$A_{2\,max}$ [N]	η %	J_G [kgcm^2] D 8 ... 12.7	J_G [kgcm^2] D 14 ... 19.05
LCK 090 2_6	37	63	90	2500	5000	6'	8	2200	1900	94	0.85	1.03
LCK 090 2_8	43	80	120	2500	5000	6'	8	2200	1900	94	0.79	0.98
LCK 090 2_10	43	80	150	2500	5000	6'	8	2200	1900	94	0.77	0.96
LCK 090 2_14	43	80	160	2500	5000	6'	8	2200	1900	94	0.75	0.94
LCK 090 2_20	37	70	150	2500	5000	6'	8	2200	1900	94	0.74	0.93
LCK 090 3_24	43	80	160	2500	5000	8'	7.8	2200	1900	91	0.81	1.00
LCK 090 3_30	43	80	160	2500	5000	8'	7.8	2200	1900	91	0.81	1.00
LCK 090 3_50	43	80	160	2500	5000	8'	7.8	2200	1900	91	0.76	0.94
LCK 090 3_70	43	80	160	2500	5000	8'	7.8	2200	1900	91	0.74	0.93
LCK 090 3_80	43	80	160	2500	5000	8'	7.8	2200	1900	91	0.74	0.93
LCK 090 3_100	43	80	160	2500	5000	8'	7.8	2200	1900	91	0.74	0.93

www.redukter-mex.ru

LCK 120

50D ... 130A1

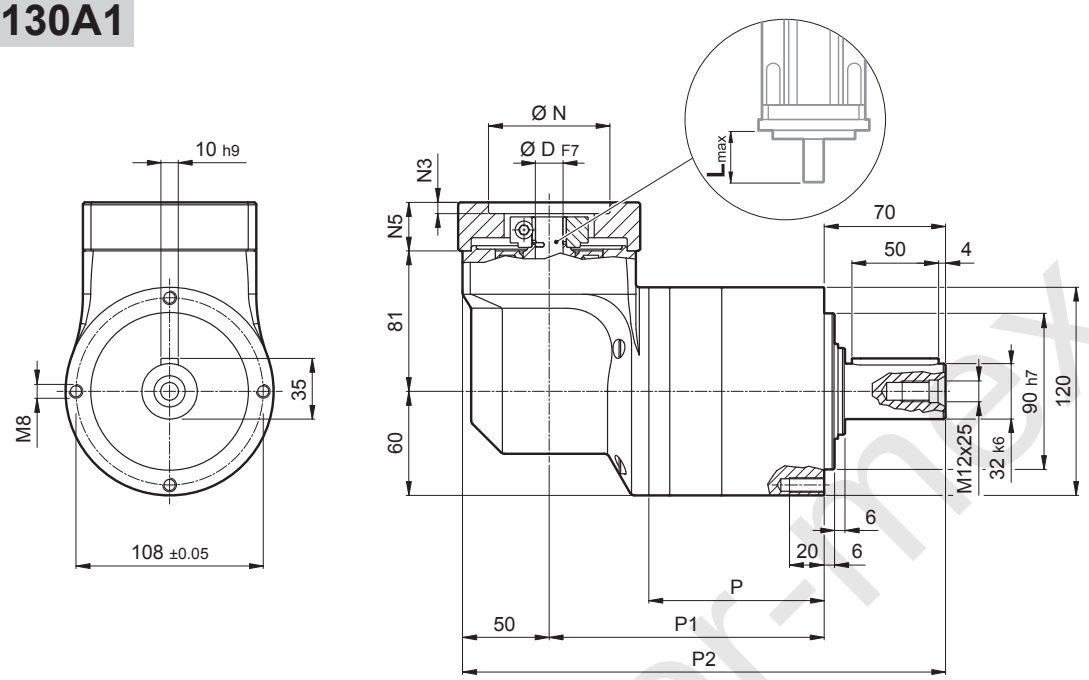

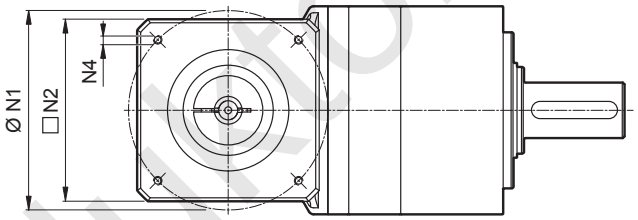

	P	P1	P2	Kg
LCK 120 2	101.1	158.6	278.6	11.3
LCK 120 3	133.6	191.1	311.1	13.8

	D										N	N1	N2	N3	N4	N5	L_{max}
50D	11	12	12.7	14	15	15.875	16	19	–	–	50	95	100	5	M6x14	28	40
55A	11	12	12.7	14	15	15.875	16	19	–	–	55.5	125.7	105	5	M6x16	28	40
60A2	11	12	12.7	14	15	15.875	16	19	–	–	60	75	100	5	M5x14	28	40
60AH2	11	12	12.7	14	15	15.875	16	19	–	–	60	75	100	5	6.5	33	40
60B1	11	12	12.7	14	15	15.875	16	19	–	–	60	85	100	6.5	M5x14	28	40
70A1	11	12	12.7	14	15	15.875	16	19	–	–	70	85	100	5	M6x14	28	40
70AH1	11	12	12.7	14	15	15.875	16	19	–	–	70	85	100	5	6	33	40
70B1	11	12	12.7	14	15	15.875	16	19	–	–	70	90	100	6.5	M5x12	28	40
80A1	11	12	12.7	14	15	15.875	16	19	–	–	80	100	100	5	M6x16	28	40
80AH1	11	12	12.7	14	15	15.875	16	19	–	–	80	100	100	5	6.5	28	40
95A	11	12	12.7	14	15	15.875	16	19	–	–	95	115	100	5	M8x18	28	40
95A1	11	12	12.7	14	15	15.875	16	19	22	24	95	115	100	5	M8x18	38	50
95B	11	12	12.7	14	15	15.875	16	19	–	–	95	130	115	5	M8x18	28	40
110A	11	12	12.7	14	15	15.875	16	19	–	–	110	130	115	5	M8x18	28	40
110A1	11	12	12.7	14	15	15.875	16	19	22	24	110	130	115	6.5	M8x20	38	50
110B	11	12	12.7	14	15	15.875	16	19	22	24	110	145	120	6.5	M8x20	38	50
110B1	11	12	12.7	14	15	15.875	16	19	22	24	110	145	120	6.5	M8x20	48	60
130A	11	12	12.7	14	15	15.875	16	19	22	24	130	165	140	6.5	M10x20	38	50
130A1	11	12	12.7	14	15	15.875	16	19	22	24	130	165	140	6.5	M10x25	48	60

Please contact us for different motor adapters and input shaft bore.

www.reductor-max.ru

LCK 120

FM

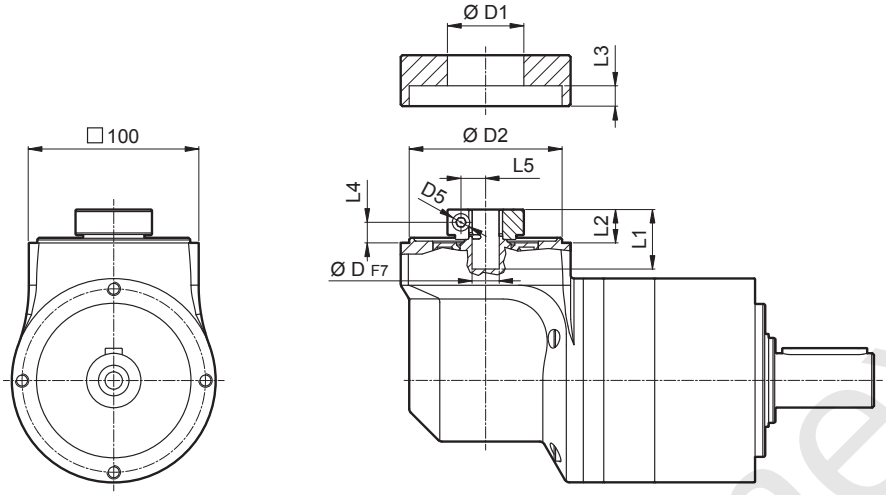

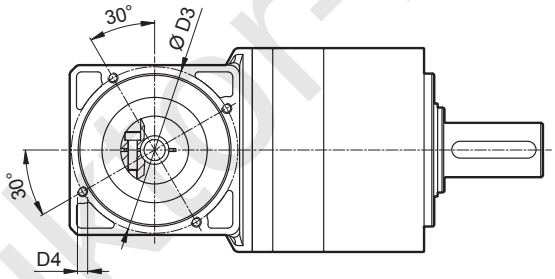

D				D1	D2	D3	D4	D5	L1	L2	L3	L4	L5
11	12	12.7		43	90	98	M6x15	M6	35	19.5	7.6	12.1	12.5
14	15	15.875	16	48	90	98	M6x15	M6	35	19.5	7.6	12.1	14.5
19				51	90	98	M6x15	M6	35	19.5	7.6	12.1	16.5
22	24			56.5	90	98	M6x15	M6	37	21.5	7.6	12.1	19

	$M_{n\,2}$	$M_{a\,2}$	$M_{p\,2}$	n_1	$n_{1\,max}$	φ_S	C_t	$R_{2\,max}$	$A_{2\,max}$	η	J_G [kgcm²] D		
i	[Nm]	[Nm]	[Nm]	[min⁻¹]	[min⁻¹]	[arcmin]	[Nm/arcmin]	[N]	[N]	%	11 ... 12.7	14 ... 19	22 ; 24
LCK 120 2_6	95	160	225	2000	4500	6'	23.4	3500	3000	94	1.74	1.82	2.01
LCK 120 2_8	110	190	300	2000	4500	6'	23.4	3500	3000	94	1.52	1.60	1.79
LCK 120 2_10	110	190	360	2000	4500	6'	23.4	3500	3000	94	1.44	1.52	1.71
LCK 120 2_14	110	190	360	2000	4500	6'	23.4	3500	3000	94	1.37	1.45	1.63
LCK 120 2_20	95	160	300	2000	4500	6'	23.4	3500	3000	94	1.32	1.40	1.59
LCK 120 3_24	110	190	360	2000	4500	8'	22.9	3500	3000	91	1.64	1.72	1.90
LCK 120 3_30	110	190	360	2000	4500	8'	22.9	3500	3000	91	1.63	1.71	1.89
LCK 120 3_50	110	190	360	2000	4500	8'	22.9	3500	3000	91	1.40	1.48	1.67
LCK 120 3_70	110	190	360	2000	4500	8'	22.9	3500	3000	91	1.34	1.42	1.61
LCK 120 3_80	110	190	360	2000	4500	8'	22.9	3500	3000	91	1.31	1.39	1.58
LCK 120 3_100	110	190	360	2000	4500	8'	22.9	3500	3000	91	1.31	1.39	1.58

www.reducer-mex.ru

LCK 155

55A1 ... 180A1

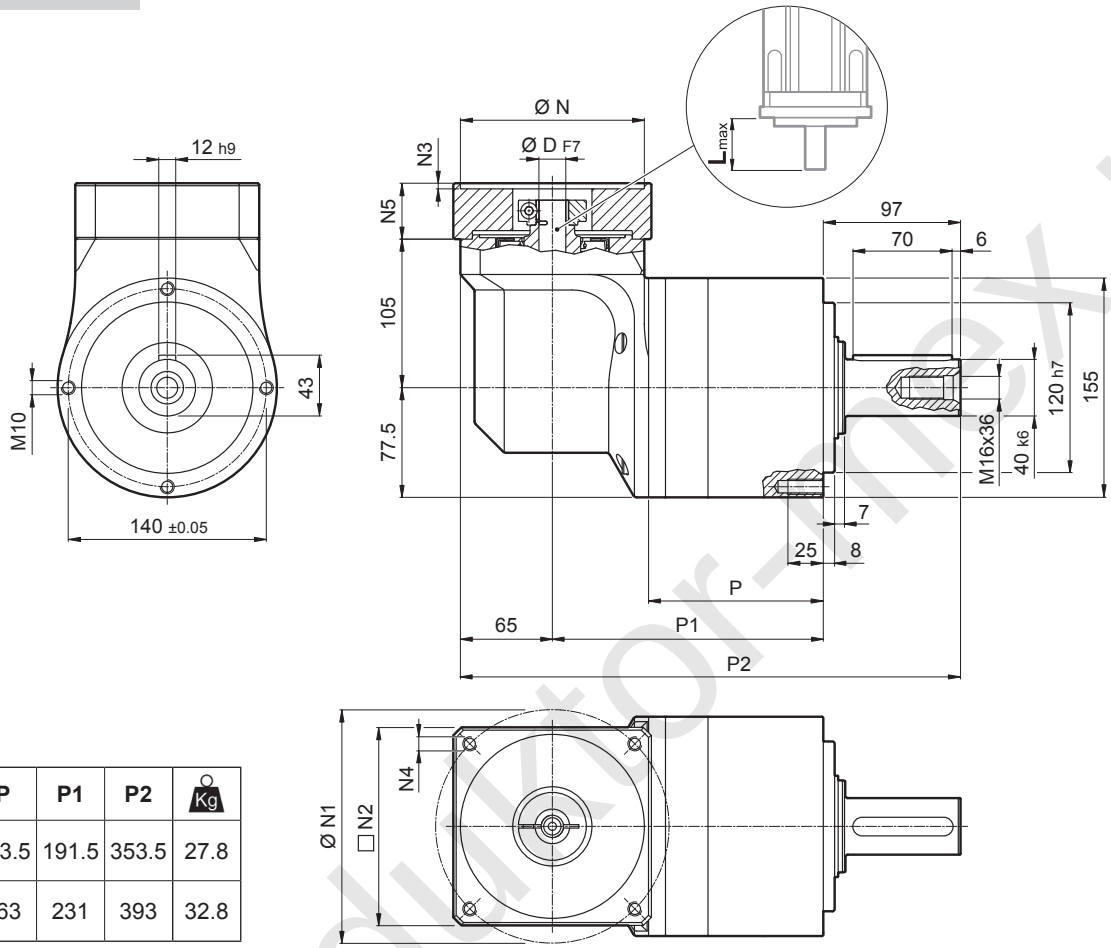

	P	P1	P2	Kg
LCK 155 2	123.5	191.5	353.5	27.8
LCK 155 3	163	231	393	32.8

	D							N	N1	N2	N3	N4	N5	L_{max}
55A1	14	15.875	16	19	–	–	–	55.5	125.7	130	4	M6x15	39.5	50
80A2	14	15.875	16	19	–	–	–	80	100	130	4	M6x15	39.5	50
95A1	14	15.875	16	19	22	24	–	95	115	130	4	M8x20	39.5	50
110A1	14	15.875	16	19	22	24	–	110	130	130	4	M8x20	39.5	50
110B1	14	15.875	16	19	22	24	–	110	145	130	6.5	M8x20	49.5	60
114A	14	15.875	16	19	22	24	28	114.3	200	170	5.5	M12x25	69.5	80
130A	14	15.875	16	19	22	24	–	130	165	140	4	M10x20	39.5	50
130A1	14	15.875	16	19	22	24	28	130	165	140	4	M10x20	49.5	60
180A	14	15.875	16	19	22	24	28	180	215	190	5.5	M14x25	49.5	60
180A1	14	15.875	16	19	22	24	28	180	215	190	5.5	M14x25	69.5	80

Please contact us for different motor adapters and input shaft bore.

www.reduktor-mex.ru

LCK 155

FM

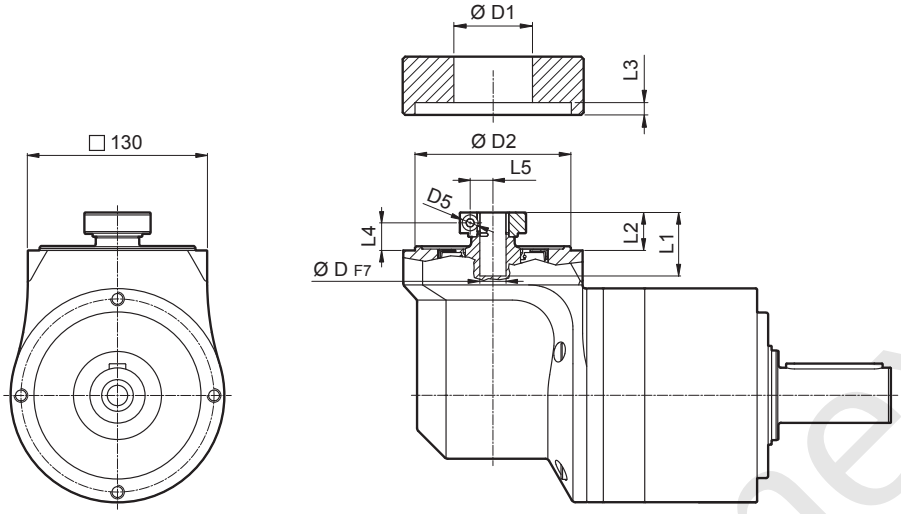

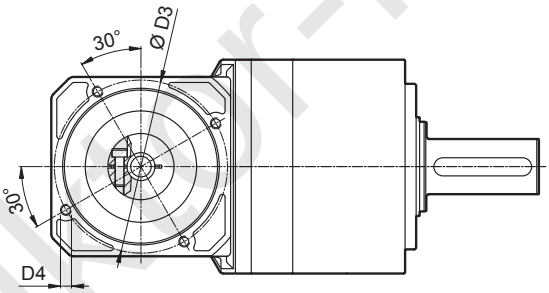

D			D1	D2	D3	D4	D5	L1	L2	L3	L4	L5
14	15.875	16	48	113	125.5	M8x15	M6	46	27.5	6	20	14.5
19			51	113	125.5	M8x15	M6	46	27.5	6	20	16.5
22	24		56.5	113	125.5	M8x15	M6	47.5	29	6	20	19
28			67	113	125.5	M8x15	M8	47.5	29	6	20	22.5

	$M_{n\,2}$	$M_{a\,2}$	$M_{p\,2}$	n_1	$n_{1\,max}$	φ_S	C_t	$R_{2\,max}$	$A_{2\,max}$	η	J_G [kgcm²] D		
i	[Nm]	[Nm]	[Nm]	[min⁻¹]	[min⁻¹]	[arcmin]	[Nm/arcmin]	[N]	[N]	%	14 ... 19	22 ; 24	28
LCK 155 2_6	250	360	510	2000	4500	6'	40.7	6000	5000	94	7.94	8.13	8.53
LCK 155 2_8	300	450	680	2000	4500	6'	40.7	6000	5000	94	7.11	7.30	7.70
LCK 155 2_10	300	450	850	2000	4500	6'	40.7	6000	5000	94	6.78	6.96	7.36
LCK 155 2_14	300	450	900	2000	4500	6'	40.7	6000	5000	94	6.48	6.67	7.07
LCK 155 2_20	230	350	750	2000	4500	6'	40.7	6000	5000	94	6.31	6.49	6.90
LCK 155 3_24	300	450	900	2000	4500	8'	37.4	6000	5000	91	7.18	7.37	7.77
LCK 155 3_30	300	450	900	2000	4500	8'	37.4	6000	5000	91	7.14	7.33	7.73
LCK 155 3_50	300	450	900	2000	4500	8'	37.4	6000	5000	91	6.49	6.68	7.08
LCK 155 3_70	300	450	900	2000	4500	8'	37.4	6000	5000	91	6.33	6.52	6.92
LCK 155 3_80	300	450	700	2000	4500	8'	37.4	6000	5000	91	6.25	6.43	6.83
LCK 155 3_100	300	450	900	2000	4500	8'	37.4	6000	5000	91	6.24	6.43	6.83

www.reduktor-mex.ru

LCK 070P

25AH ... 80A

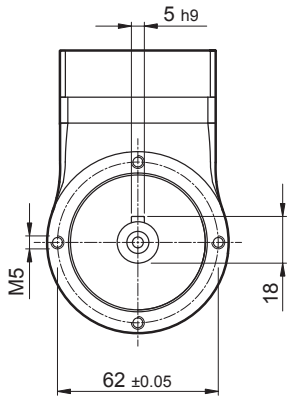

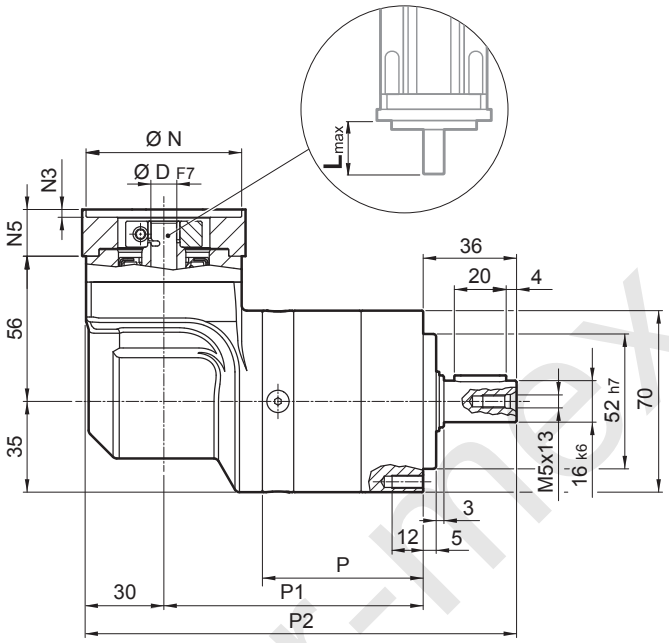

	P	P1	P2	Kg
LCK 070P 2	62	100	166	2.7
LCK 070P 3	78.7	116.7	182.7	3.0

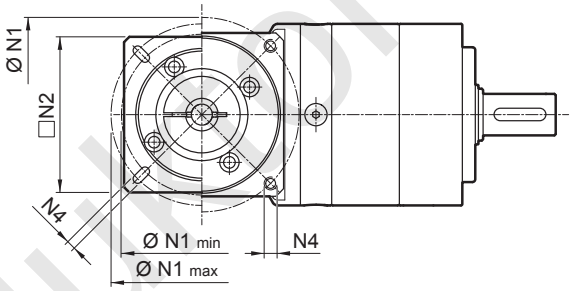

	D											N	N1 min	N1 max	N2	N3	N4	N5	L_{max}
25AH	6	6.35	7	8	9	9.52	–	–	–	–	–	25	39	56					
26AH	6	6.35	7	8	9	9.52	–	–	–	–	–	26	39	56					
28AH	6	6.35	7	8	9	9.52	–	–	–	–	–	28	39	56					
30AH	6	6.35	7	8	9	9.52	–	–	–	–	–	30	39	56					
32AH	6	6.35	7	8	9	9.52	–	–	–	–	–	32	39	56	65	3.5	4.5	25	25
34AH	6	6.35	7	8	9	9.52	–	–	–	–	–	34	40	56					
36AH	6	6.35	7	8	9	9.52	–	–	–	–	–	36	42	56					
39AH	6	6.35	7	8	9	9.52	–	–	–	–	–	39	45	56					
40AH	6	6.35	7	8	9	9.52	–	–	–	–	–	40	46	56					
38B	6	6.35	7	8	9	9.52	10	11	12	12.7	–	38.1	66.6		60	3	M4x10	18	25
40B	6	6.35	7	8	9	9.52	10	11	12	12.7	–	40	63		60	3	M4x10	18	25
50A	6	6.35	7	8	9	9.52	10	11	12	12.7	–	50	60		60	3	M4x10	18	25
50B	6	6.35	7	8	9	9.52	10	11	12	12.7	14	50	65		60	3	M5x12	23	30
50BH	6	6.35	7	8	9	9.52	10	11	12	12.7	14	50	65		65	3	5.5	25	32
50C	6	6.35	7	8	9	9.52	10	11	12	12.7	14	50	70		60	3	M4x10	23	30
55MH	6	6.35	7	8	9	9.52	10	11	12	12.7	–	55	80		65	2	5.5	16	23
60A	6	6.35	7	8	9	9.52	10	11	12	12.7	–	60	75		65	3	M5x12	18	25
60A1	6	6.35	7	8	9	9.52	10	11	12	12.7	14	60	75		65	3	M5x12	23	30
60B	6	6.35	7	8	9	9.52	10	11	12	12.7	14	60	85		75	3	M5x12	23	30
60C	6	6.35	7	8	9	9.52	10	11	12	12.7	14	60	90		75	3	M5x12	23	30
70A	6	6.35	7	8	9	9.52	10	11	12	12.7	14	70	85		75	3	M6x15	23	30
70B	6	6.35	7	8	9	9.52	10	11	12	12.7	14	70	90		75	5	M5x12	23	30
73A	6	6.35	7	8	9	9.52	10	11	12	12.7	14	73	98.4		85	3	M5x12	25	32
80A	6	6.35	7	8	9	9.52	10	11	12	12.7	14	80	100		85	3	M6x15	23	30

Please contact us for different motor adapters and input shaft bore.

www.redukTor-mex.ru

LCK 070P

FM

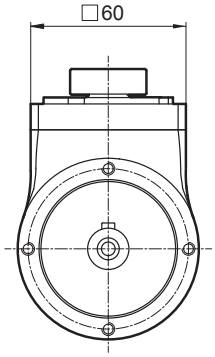

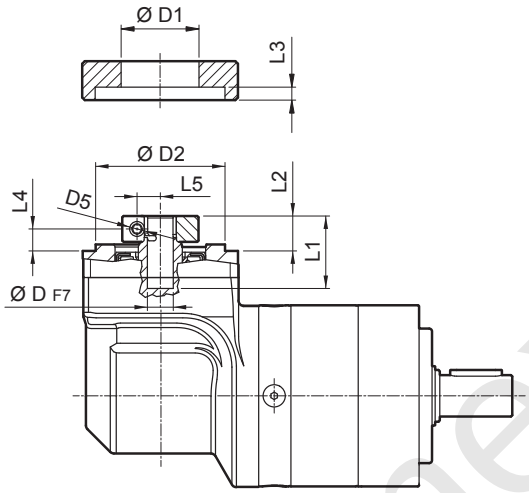

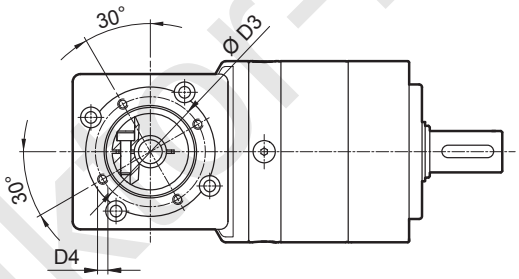

D				D1	D2	D3	D4	D5	L1	L2	L3	L4	L5
6	6.35	7		32.5	50	42.5	M4x8	M4	28	13.5	3	8.5	8
8	9	9.52	10	32.5	50	42.5	M4x8	M4	28	13.5	3	8.5	9
11	12	12.7		35.5	50	42.5	M4x8	M4	23	13.5	3	8.5	11
14				35.5	50	42.5	M4x8	M4	25	15.5	3	8.9	11.5

	i	$M_{n\,2}$ [Nm]	$M_{a\,2}$ [Nm]	$M_{p\,2}$ [Nm]	n_1 [min^{-1}]	$n_{1\,max}$ [min^{-1}]	φ_S [arcmin]	C_t [Nm/arcmin]	$R_{2\,max}$ [N]	$A_{2\,max}$ [N]	η %	J_G [kgcm^2] D 6 ... 9.52	J_G [kgcm^2] D 11 ... 14
LCK 070P 2_6		25	38	45	2500	5000	6'	2.8	1300	1400	94	0.25	0.26
LCK 070P 2_8		30	40	60	2500	5000	6'	2.8	1300	1400	94	0.24	0.25
LCK 070P 2_10		25	40	70	2500	5000	6'	2.8	1300	1400	94	0.23	0.25
LCK 070P 2_14		25	40	70	2500	5000	6'	2.8	1300	1400	94	0.23	0.24
LCK 070P 2_20		18	30	60	2500	5000	6'	2.8	1300	1400	94	0.23	0.24
LCK 070P 3_24		29	45	70	2500	5000	8'	2.5	1300	1400	91	0.24	0.26
LCK 070P 3_30		29	45	70	2500	5000	8'	2.5	1300	1400	91	0.24	0.26
LCK 070P 3_50		30	45	70	2500	5000	8'	2.5	1300	1400	91	0.23	0.24
LCK 070P 3_70		30	45	70	2500	5000	8'	2.5	1300	1400	91	0.23	0.24
LCK 070P 3_80		30	45	70	2500	5000	8'	2.5	1300	1400	91	0.23	0.24
LCK 070P 3_100		30	45	70	2500	5000	8'	2.5	1300	1400	91	0.23	0.24

www.redukor-mex.ru

LCK 090P

40B1 ... 110B1

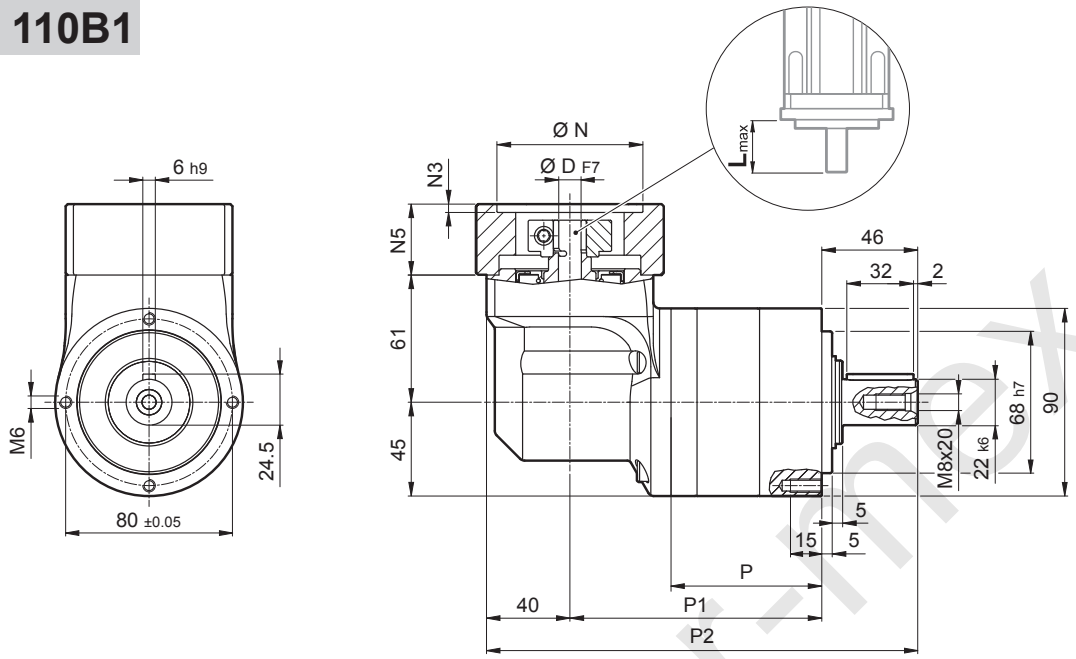

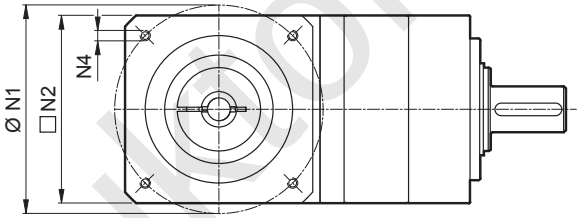

	P	P1	P2	Kg
LCK 090P 2	72.3	120.8	206.8	5.2
LCK 090P 3	98.8	147.3	233.3	6.3

	D												N	N1	N2	N3	N4	N5	L_{max}
40B1	8	9	9.52	11	12	12.7	14	–	–	–	–	–	40	63	80	4	M4x10	34	40
45A	8	9	9.52	11	12	12.7	–	–	–	–	–	–	45	63	80	4	M4x10	34	40
50B1	8	9	9.52	11	12	12.7	14	–	–	–	–	–	50	65	80	4	M5x16	34	40
50BH1	8	9	9.52	11	12	12.7	14	–	–	–	–	–	50	65	80	4	5.5	34	40
50C1	8	9	9.52	11	12	12.7	14	–	–	–	–	–	50	70	80	4	M4x10	34	40
50D	8	9	9.52	11	12	12.7	14	–	–	–	–	–	50	95	80	4	M6x10	34	40
55A	8	9	9.52	11	12	12.7	14	15.875	16	17	19	19.05	55.5	125.7	105	4	M6x16	34	40
60A2	8	9	9.52	11	12	12.7	14	–	–	–	–	–	60	75	80	4	M5x16	34	40
60AH2	8	9	9.52	11	12	12.7	14	–	–	–	–	–	60	75	90	4	5.5	34	40
60B1	8	9	9.52	11	12	12.7	14	15.875	16	–	–	–	60	85	80	4	M5x16	34	40
60C1	8	9	9.52	11	12	12.7	14	15.875	16	–	–	–	60	90	80	4	M5x16	34	40
70A1	8	9	9.52	11	12	12.7	14	15.875	16	17	19	19.05	70	85	80	4	M6x20	34	40
70AH1	8	9	9.52	11	12	12.7	14	15.875	16	17	19	19.05	70	85	90	4	6.5	34	40
70B1	8	9	9.52	11	12	12.7	14	15.875	16	17	19	19.05	70	90	80	4	M5x16	34	40
73A1	8	9	9.52	11	12	12.7	14	–	–	–	–	–	73	98.4	85	4	M5x16	34	40
80A1	8	9	9.52	11	12	12.7	14	15.875	16	17	19	19.05	80	100	90	4	M6x16	34	40
95A	8	9	9.52	11	12	12.7	14	15.875	16	17	19	19.05	95	115	100	4	M8x20	34	40
95B	8	9	9.52	11	12	12.7	14	15.875	16	17	19	19.05	95	130	115	4	M8x20	34	40
110A	8	9	9.52	11	12	12.7	14	15.875	16	17	19	19.05	110	130	115	4	M8x20	34	40
110B	8	9	9.52	11	12	12.7	14	15.875	16	17	19	19.05	110	145	120	6.5	M8x20	44	50
110B1	8	9	9.52	11	12	12.7	14	15.875	16	17	19	19.05	110	145	120	6.5	M8x20	54	60

Please contact us for different motor adapters and input shaft bore.

www.redukor-mex.ru

LCK 090P

FM

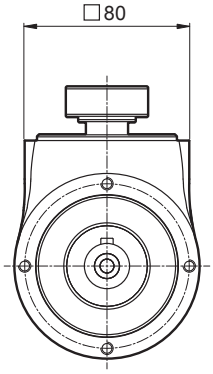

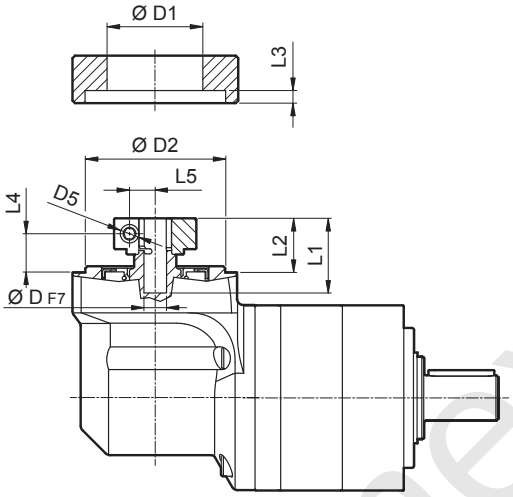

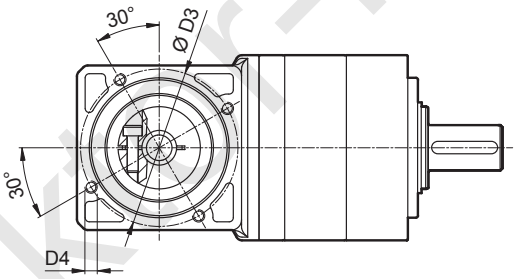

D				D1	D2	D3	D4	D5	L1	L2	L3	L4	L5
8	9	9.52		38	68	76.5	M6x10	M6	36.3	26.3	9.5	18.8	10.5
11	12	12.7		43	68	76.5	M6x10	M6	36.3	26.3	9.5	18.8	12.5
14	15.875	16	17	48	68	76.5	M6x10	M6	36.3	26.3	9.5	18.8	14.5
19	19.05			51	68	76.5	M6x10	M6	36.3	26.3	9.5	18.8	16.5

	$M_{n\,2}$	$M_{a\,2}$	$M_{p\,2}$	n_1	$n_{1\,max}$	φ_S	C_t	$R_{2\,max}$	$A_{2\,max}$	η	J_G [kgcm²] D	
i	[Nm]	[Nm]	[Nm]	[min⁻¹]	[min⁻¹]	[arcmin]	[Nm/arcmin]	[N]	[N]	%	8 ... 12.7	14 ... 19
LCK 090P 2_6	45	70	90	2500	5000	6'	11	2200	1900	94	0.85	1.03
LCK 090P 2_8	60	90	120	2500	5000	6'	11	2200	1900	94	0.79	0.98
LCK 090P 2_10	50	90	150	2500	5000	6'	8	2200	1900	94	0.77	0.96
LCK 090P 2_14	50	90	160	2500	5000	6'	8	2200	1900	94	0.75	0.94
LCK 090P 2_20	40	70	150	2500	5000	6'	8	2200	1900	94	0.74	0.93
LCK 090P 3_24	60	90	160	2500	5000	8'	10.8	2200	1900	91	0.81	1.00
LCK 090P 3_30	60	90	160	2500	5000	8'	10.8	2200	1900	91	0.81	1.00
LCK 090P 3_50	50	90	160	2500	5000	8'	7.8	2200	1900	91	0.76	0.94
LCK 090P 3_70	50	90	160	2500	5000	8'	7.8	2200	1900	91	0.74	0.93
LCK 090P 3_80	60	90	160	2500	5000	8'	10.8	2200	1900	91	0.74	0.93
LCK 090P 3_100	50	90	160	2500	5000	8'	7.8	2200	1900	91	0.74	0.93

www.redukter-mex.ru

LCK 120P

50D ... 130A1

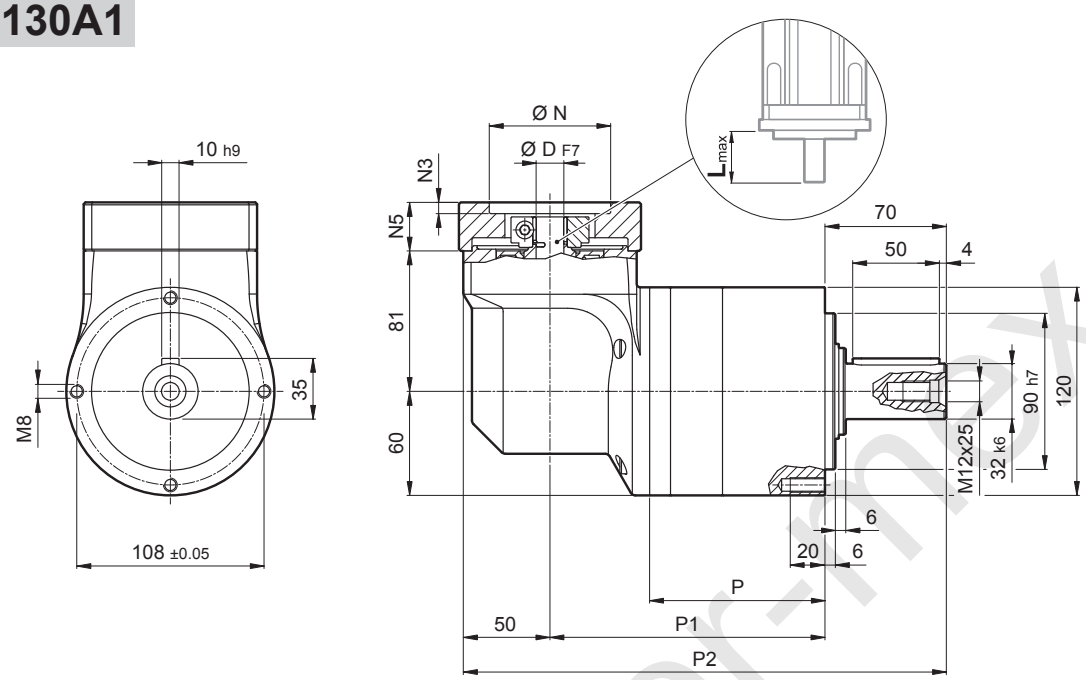

	P	P1	P2	Kg
LCK 120P 2	101.1	158.6	278.6	11.3
LCK 120P 3	133.6	191.1	311.1	13.8

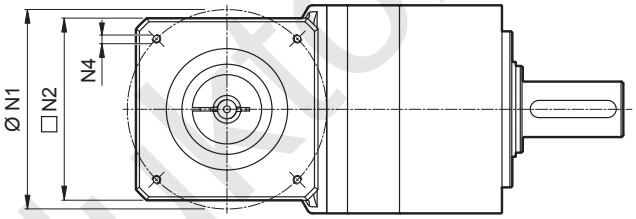

	D										N	N1	N2	N3	N4	N5	L_{max}
50D	11	12	12.7	14	15	15.875	16	19	–	–	50	95	100	5	M6x14	28	40
55A	11	12	12.7	14	15	15.875	16	19	–	–	55.5	125.7	105	5	M6x16	28	40
60A2	11	12	12.7	14	15	15.875	16	19	–	–	60	75	100	5	M5x14	28	40
60AH2	11	12	12.7	14	15	15.875	16	19	–	–	60	75	100	5	6.5	33	40
60B1	11	12	12.7	14	15	15.875	16	19	–	–	60	85	100	6.5	M5x14	28	40
70A1	11	12	12.7	14	15	15.875	16	19	–	–	70	85	100	5	M6x14	28	40
70AH1	11	12	12.7	14	15	15.875	16	19	–	–	70	85	100	5	6	33	40
70B1	11	12	12.7	14	15	15.875	16	19	–	–	70	90	100	6.5	M5x12	28	40
80A1	11	12	12.7	14	15	15.875	16	19	–	–	80	100	100	5	M6x16	28	40
80AH1	11	12	12.7	14	15	15.875	16	19	–	–	80	100	100	5	6.5	28	40
95A	11	12	12.7	14	15	15.875	16	19	–	–	95	115	100	5	M8x18	28	40
95A1	11	12	12.7	14	15	15.875	16	19	22	24	95	115	100	5	M8x18	38	50
95B	11	12	12.7	14	15	15.875	16	19	–	–	95	130	115	5	M8x18	28	40
110A	11	12	12.7	14	15	15.875	16	19	–	–	110	130	115	5	M8x18	28	40
110A1	11	12	12.7	14	15	15.875	16	19	22	24	110	130	115	6.5	M8x20	38	50
110B	11	12	12.7	14	15	15.875	16	19	22	24	110	145	120	6.5	M8x20	38	50
110B1	11	12	12.7	14	15	15.875	16	19	22	24	110	145	120	6.5	M8x20	48	60
130A	11	12	12.7	14	15	15.875	16	19	22	24	130	165	140	6.5	M10x20	38	50
130A1	11	12	12.7	14	15	15.875	16	19	22	24	130	165	140	6.5	M10x25	48	60

Please contact us for different motor adapters and input shaft bore.

www.reductor-index.ru

LCK 120P

FM

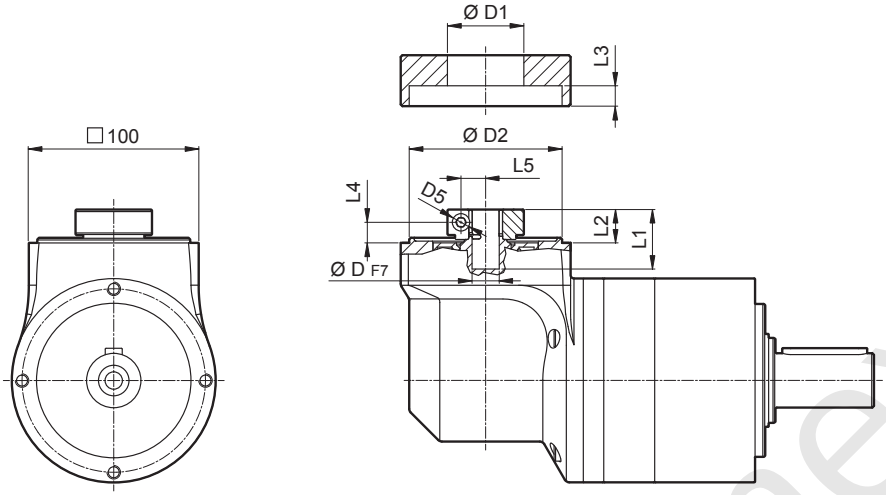

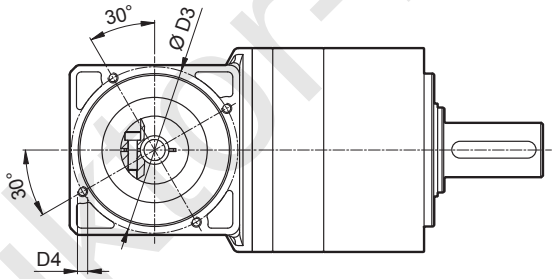

D				D1	D2	D3	D4	D5	L1	L2	L3	L4	L5
11	12	12.7		43	90	98	M6x15	M6	35	19.5	7.6	12.1	12.5
14	15	15.875	16	48	90	98	M6x15	M6	35	19.5	7.6	12.1	14.5
19				51	90	98	M6x15	M6	35	19.5	7.6	12.1	16.5
22	24			56.5	90	98	M6x15	M6	37	21.5	7.6	12.1	19

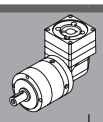 i	$M_{n\,2}$ [Nm]	$M_{a\,2}$ [Nm]	$M_{p\,2}$ [Nm]	n_1 [min^{-1}]	$n_{1\,max}$ [min^{-1}]	φ_S [arcmin]	C_t [Nm/arcmin]	$R_{2\,max}$ [N]	$A_{2\,max}$ [N]	η %	J_G [kgcm^2] D 14 ... 19	22 ; 24	28 ; 32
LCK 120P 2_6	110	160	225	2000	4500	6'	28.4	3500	3000	94	1.74	1.82	2.01
LCK 120P 2_8	140	220	300	2000	4500	6'	28.4	3500	3000	94	1.52	1.60	1.79
LCK 120P 2_10	125	220	360	2000	4500	6'	28.4	3500	3000	94	1.44	1.52	1.71
LCK 120P 2_14	125	220	360	2000	4500	6'	28.4	3500	3000	94	1.37	1.45	1.63
LCK 120P 2_20	100	160	300	2000	4500	6'	28.4	3500	3000	94	1.32	1.40	1.59
LCK 120P 3_24	155	220	360	2000	4500	8'	28.4	3500	3000	91	1.64	1.72	1.90
LCK 120P 3_30	155	220	360	2000	4500	8'	28.4	3500	3000	91	1.63	1.71	1.89
LCK 120P 3_50	125	220	360	2000	4500	8'	22.9	3500	3000	91	1.40	1.48	1.67
LCK 120P 3_70	125	220	360	2000	4500	8'	22.9	3500	3000	91	1.34	1.42	1.61
LCK 120P 3_80	155	220	360	2000	4500	8'	28.4	3500	3000	91	1.31	1.39	1.58
LCK 120P 3_100	125	220	360	2000	4500	8'	22.9	3500	3000	91	1.31	1.39	1.58

www.redukor-mex.ru

LCK 155P

55A1 ... 180A1

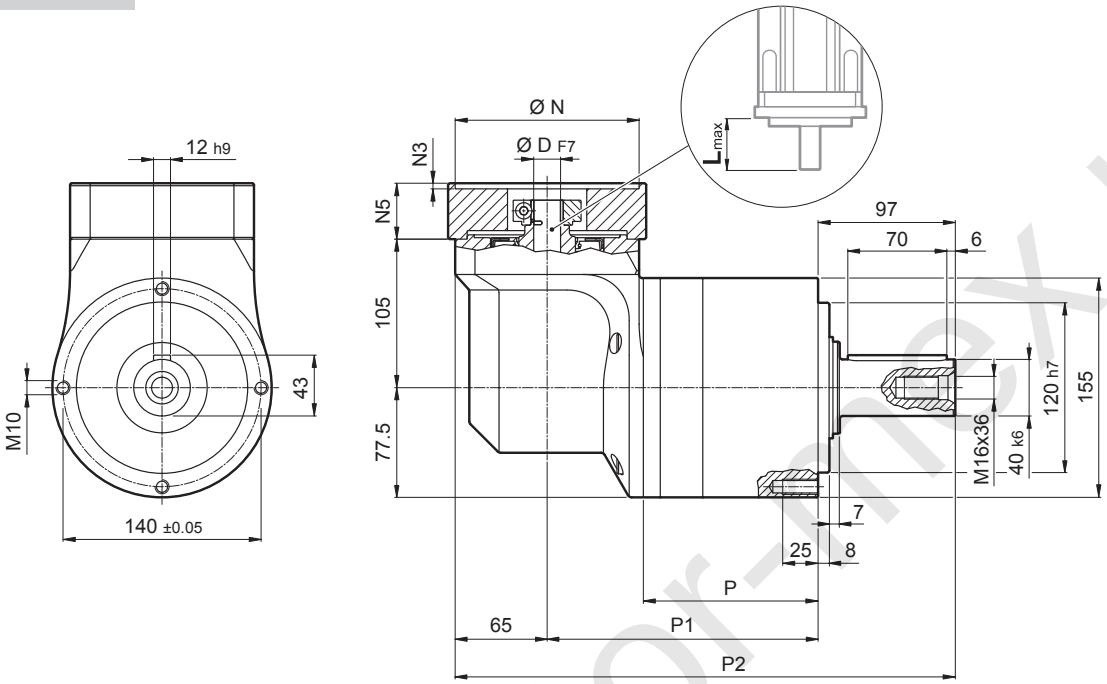

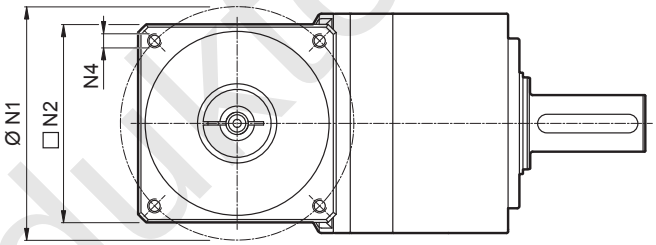

	P	P1	P2	Kg
LCK 155P 2	123.5	191.5	353.5	27.8
LCK 155P 3	163	231	393	32.8

	D							N	N1	N2	N3	N4	N5	L_{max}
55A1	14	15.875	16	19	–	–	–	55.5	125.7	130	4	M6x15	39.5	50
80A2	14	15.875	16	19	–	–	–	80	100	130	4	M6x15	39.5	50
95A1	14	15.875	16	19	22	24	–	95	115	130	4	M8x20	39.5	50
110A1	14	15.875	16	19	22	24	–	110	130	130	4	M8x20	39.5	50
110B1	14	15.875	16	19	22	24	–	110	145	130	6.5	M8x20	49.5	60
114A	14	15.875	16	19	22	24	28	114.3	200	170	5.5	M12x25	69.5	80
130A	14	15.875	16	19	22	24	–	130	165	140	4	M10x20	39.5	50
130A1	14	15.875	16	19	22	24	28	130	165	140	4	M10x20	49.5	60
180A	14	15.875	16	19	22	24	28	180	215	190	5.5	M14x25	49.5	60
180A1	14	15.875	16	19	22	24	28	180	215	190	5.5	M14x25	69.5	80

Please contact us for different motor adapters and input shaft bore.

www.reduktor-mex.ru

LCK 155P

FM

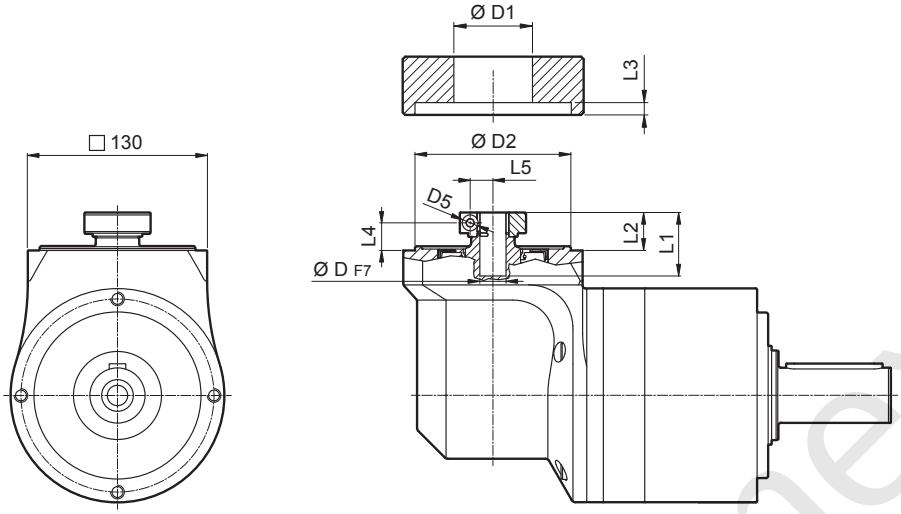

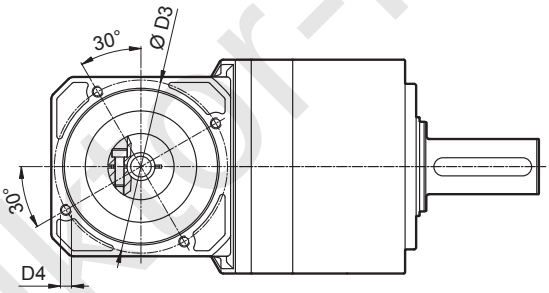

D			D1	D2	D3	D4	D5	L1	L2	L3	L4	L5
14	15.875	16	48	113	125.5	M8x15	M6	46	27.5	6	20	14.5
19			51	113	125.5	M8x15	M6	46	27.5	6	20	16.5
22	24		56.5	113	125.5	M8x15	M6	47.5	29	6	20	19
28			67	113	125.5	M8x15	M8	47.5	29	6	20	22.5

i	$M_{n\,2}$ [Nm]	$M_{a\,2}$ [Nm]	$M_{p\,2}$ [Nm]	n_1 [min^{-1}]	$n_{1\,max}$ [min^{-1}]	φ_S [arcmin]	C_t [Nm/arcmin]	$R_{2\,max}$ [N]	$A_{2\,max}$ [N]	η %	J_G [kgcm^2] D 14 ... 19	22 ; 24	28
LCK 155P 2_6	250	380	600	2000	4500	6'	47.9	6000	5000	94	7.94	8.13	8.53
LCK 155P 2_8	350	500	1000	2000	4500	6'	47.9	6000	5000	94	7.11	7.30	7.70
LCK 155P 2_10	350	500	1000	2000	4500	6'	47.9	6000	5000	94	6.78	6.96	7.36
LCK 155P 2_14	350	500	1000	2000	4500	6'	47.9	6000	5000	94	6.48	6.67	7.07
LCK 155P 2_20	230	350	750	2000	4500	6'	47.9	6000	5000	94	6.31	6.49	6.90
LCK 155P 3_24	450	700	1000	2000	4500	8'	44.6	6000	5000	91	7.18	7.37	7.77
LCK 155P 3_30	450	700	1000	2000	4500	8'	44.6	6000	5000	91	7.14	7.33	7.73
LCK 155P 3_50	450	700	1000	2000	4500	8'	44.6	6000	5000	91	6.49	6.68	7.08
LCK 155P 3_70	450	700	1000	2000	4500	8'	44.6	6000	5000	91	6.33	6.52	6.92
LCK 155P 3_80	450	700	1000	2000	4500	8'	44.6	6000	5000	91	6.25	6.43	6.83
LCK 155P 3_100	450	700	1000	2000	4500	8'	44.6	6000	5000	91	6.24	6.43	6.83

www.reductor-mex.ru